PIONEERING WITH PASSIO

Digitale Übertragung in Satellitennetzen am Beispiel EDRS (European Data Relay Satellite)

Prof. Dr. Bernd Friedrichs

PROPRIETARY INFORMATION
©Tesat-Spacecom GmbH & Co.KG reserves all rights including industrial property rights, and all rights of disposal such as copying and passing to third parties

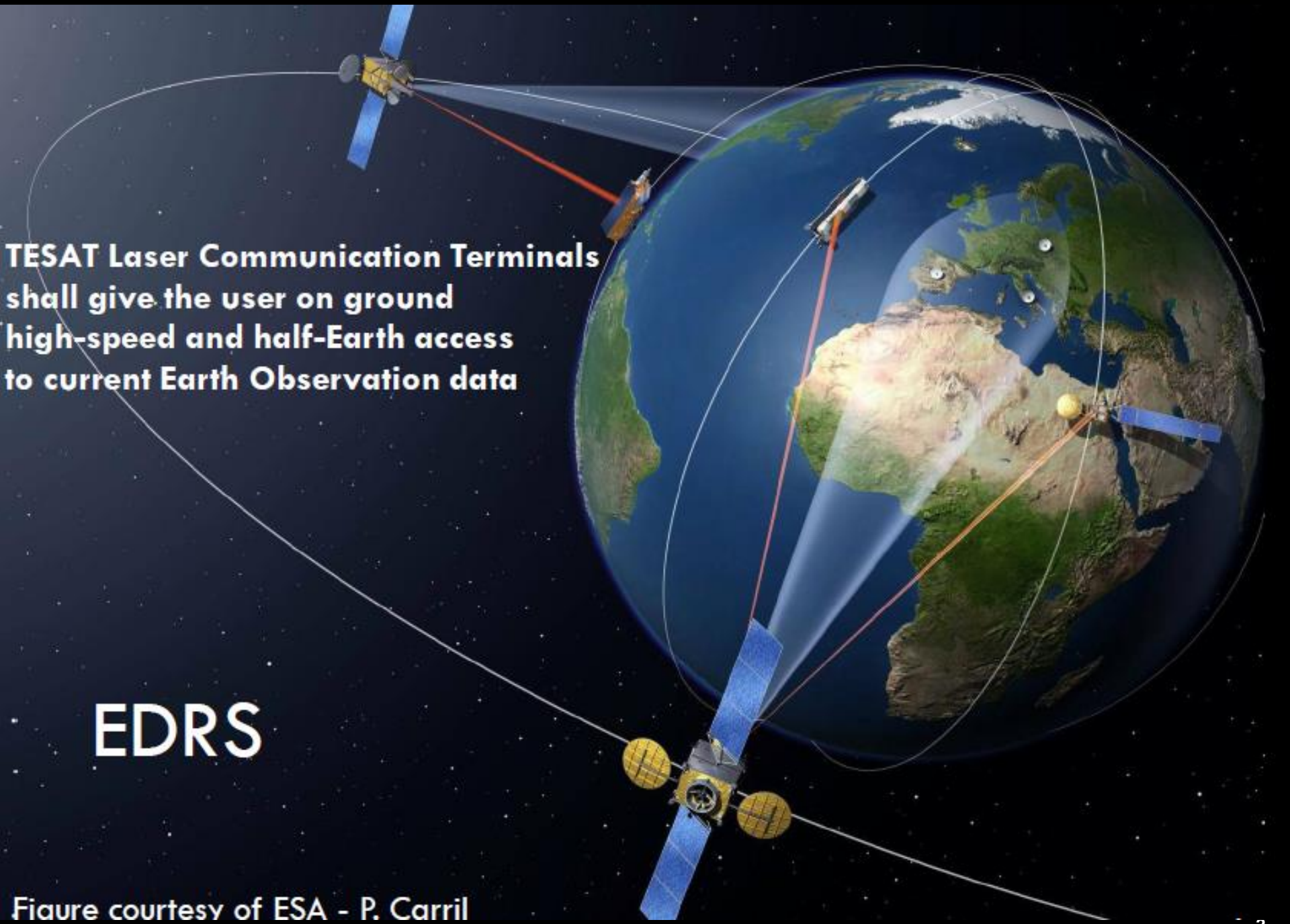

Figure courtesy of ESA - P. Carril

Overview Satellite Network

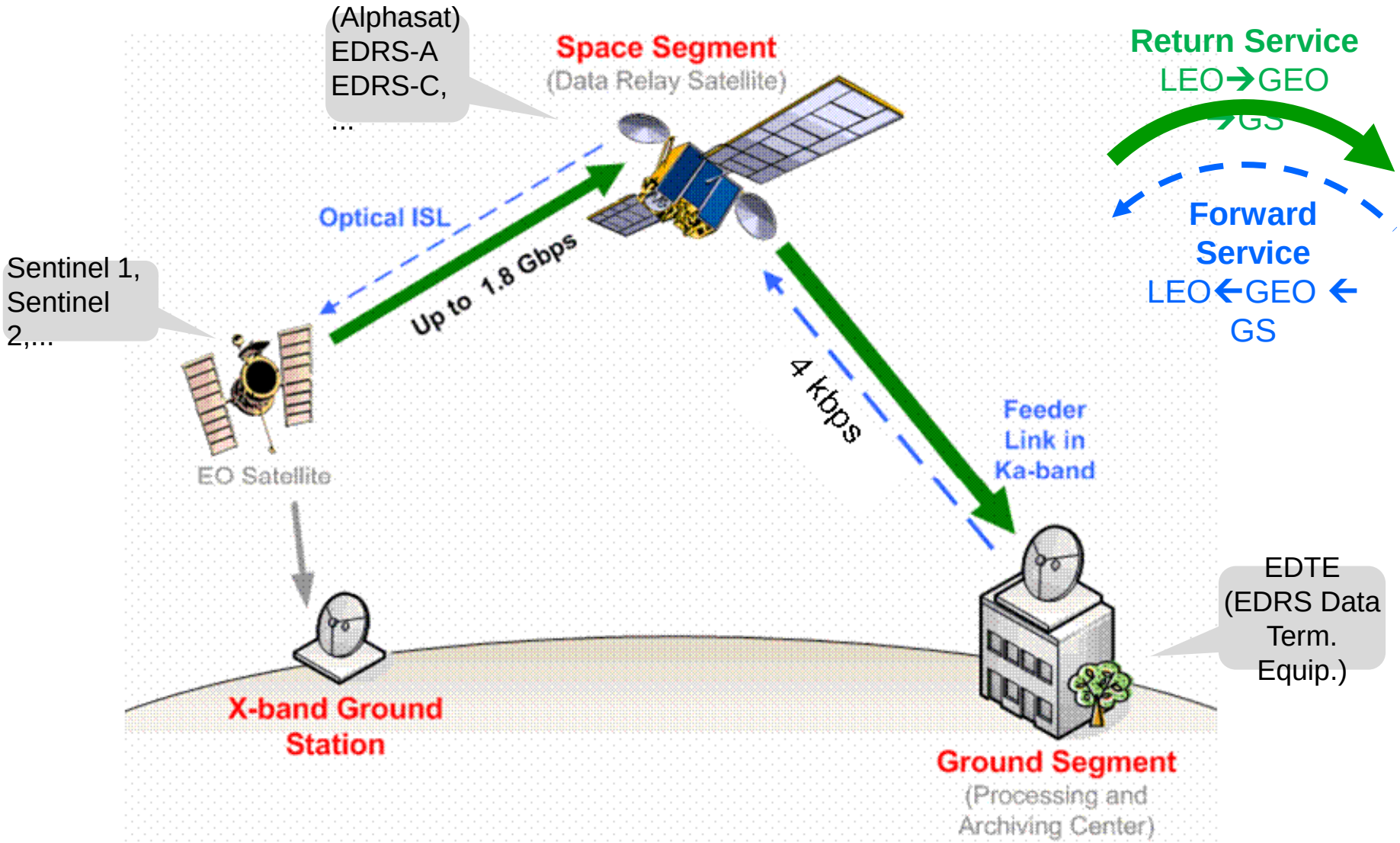

©Tesat-Spacecom GmbH & Co.KG 2010

System Overview – Data Handling Basics

LIAU = LCT Interface Adaptation Unit (Rtn)
DPU = Data Processing Unit (Rtn)
DRAU = Data Rate Adaptation Unit (Fwd)

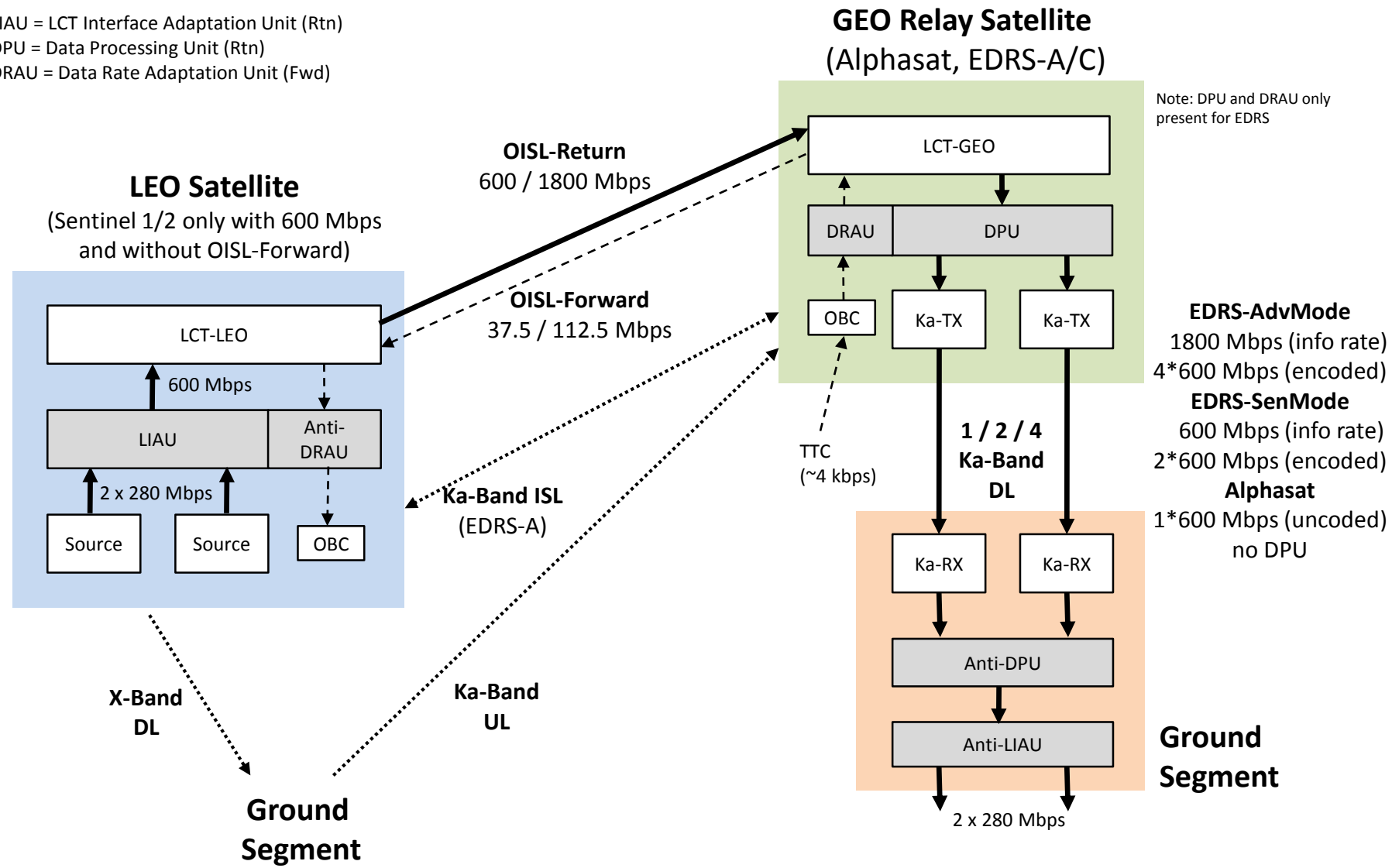

©Tesat-Spacecom GmbH & Co.KG 2010

System Overview – Reference Points & Error Rates

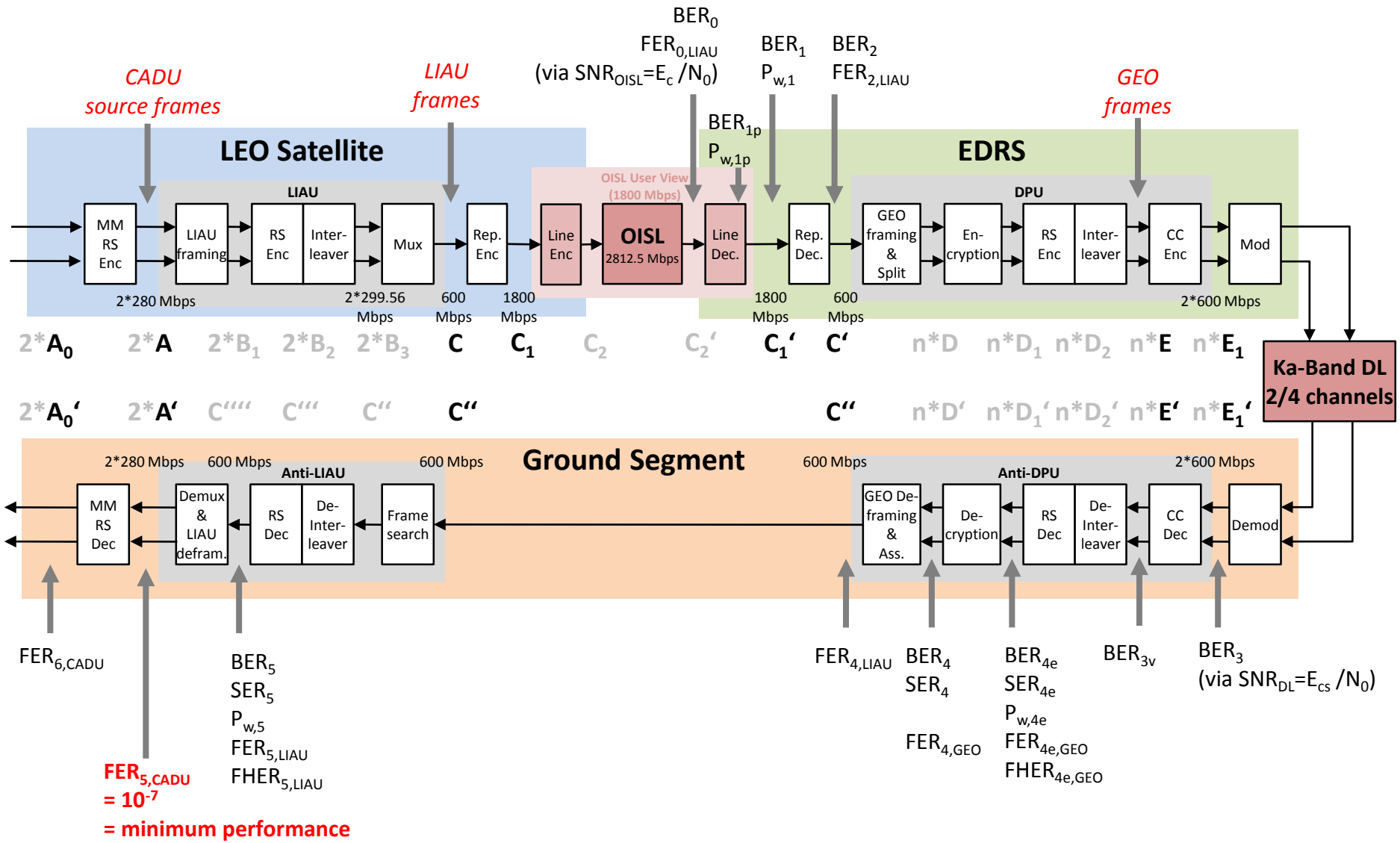

DPU Architecture ... signal processing and clock view

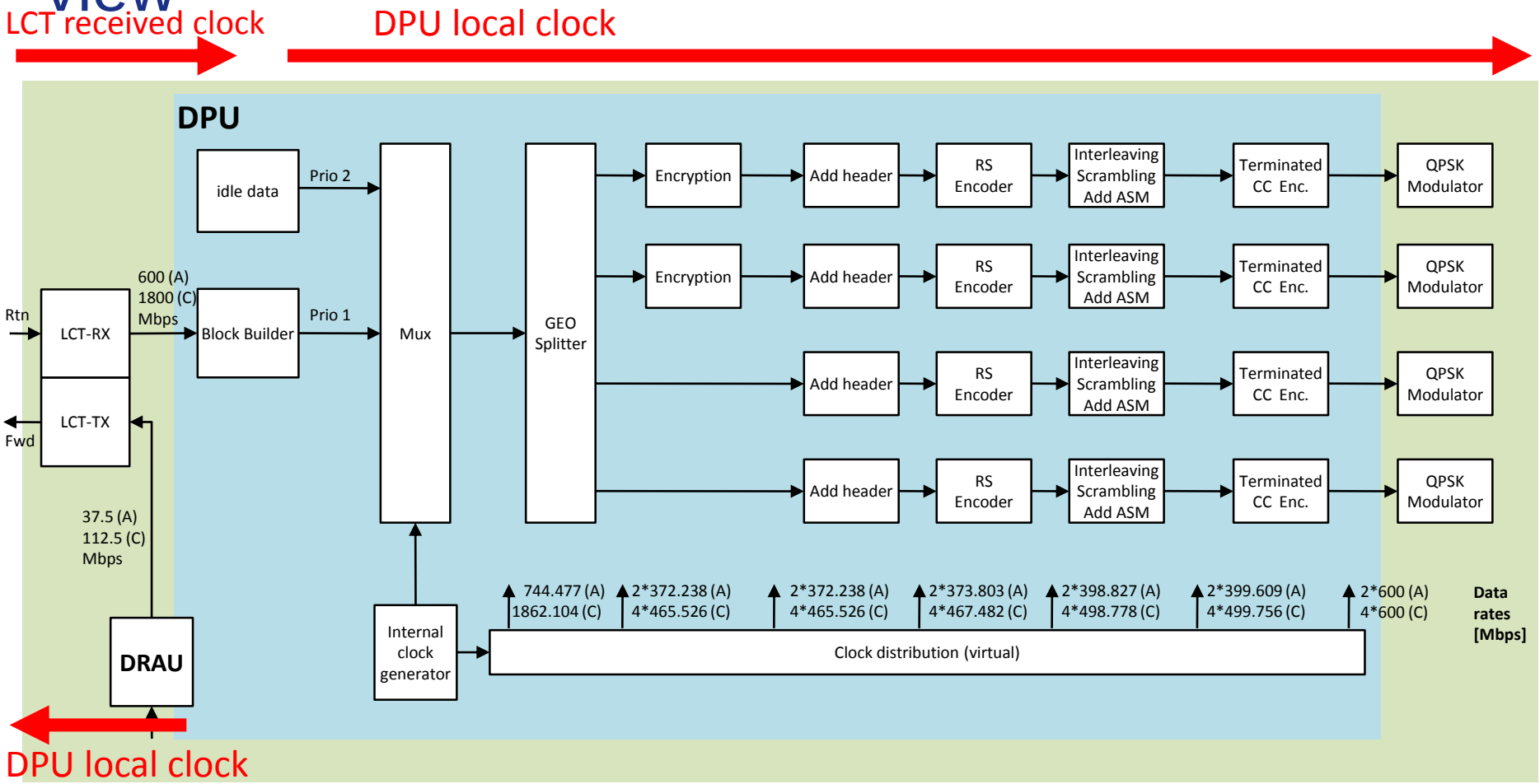

Notes:

- A=SenMode, C=AdvMode
- All operations are terminated (AES-CBC/IV, RS, CC)
- Encryption for 2 channels only

©Tesat-Spacecom GmbH & Co.KG 2010

DPU Encryption – AES-CBC Mode

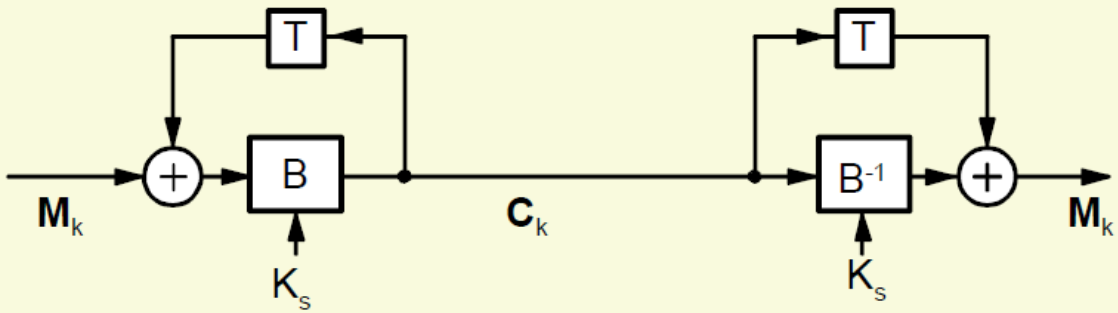

CBC (Cipher Block Chaining Mode)

Encipher: $\mathbf{C}_k = B(\mathbf{M}_k + \mathbf{C}_{k-1})$, $\mathbf{C}_0 = \mathbf{IV}$

Decipher: $\mathbf{M}_k = \mathbf{C}_{k-1} + B^{-1}(\mathbf{C}_k)$, $\mathbf{C}_0 = \mathbf{IV}$

- Legend
  - M_k = k-th plaintext block (128 bit); $M_1 \ldots M_{119}$ = content of frame before encryption (1904 byte)
  - C_k = k-th ciphertext block (128 bit); $C_1 \ldots C_{119}$ = content of frame after encryption (1904 byte)
  - B = AES block encipher
  - B^{-1} = AES block decipher
  - K_s = symmetric key (256 bit)
  - IV = C_0 = initialization vector (128 bit)
  - T = delay by one block (of 128 bit)
- Errors during transmission
  - A single error in a received frame implies about 65 errors after decryption (proof: a single error in C_k implies 50% error rate in M_k and another error in M_{k+1})
  - Bit slip does not occur in frame-based systems (otherwise catastrophic error propagation)

©Tesat-Spacecom GmbH & Co.KG 2010

DPU Interleaving Schemes

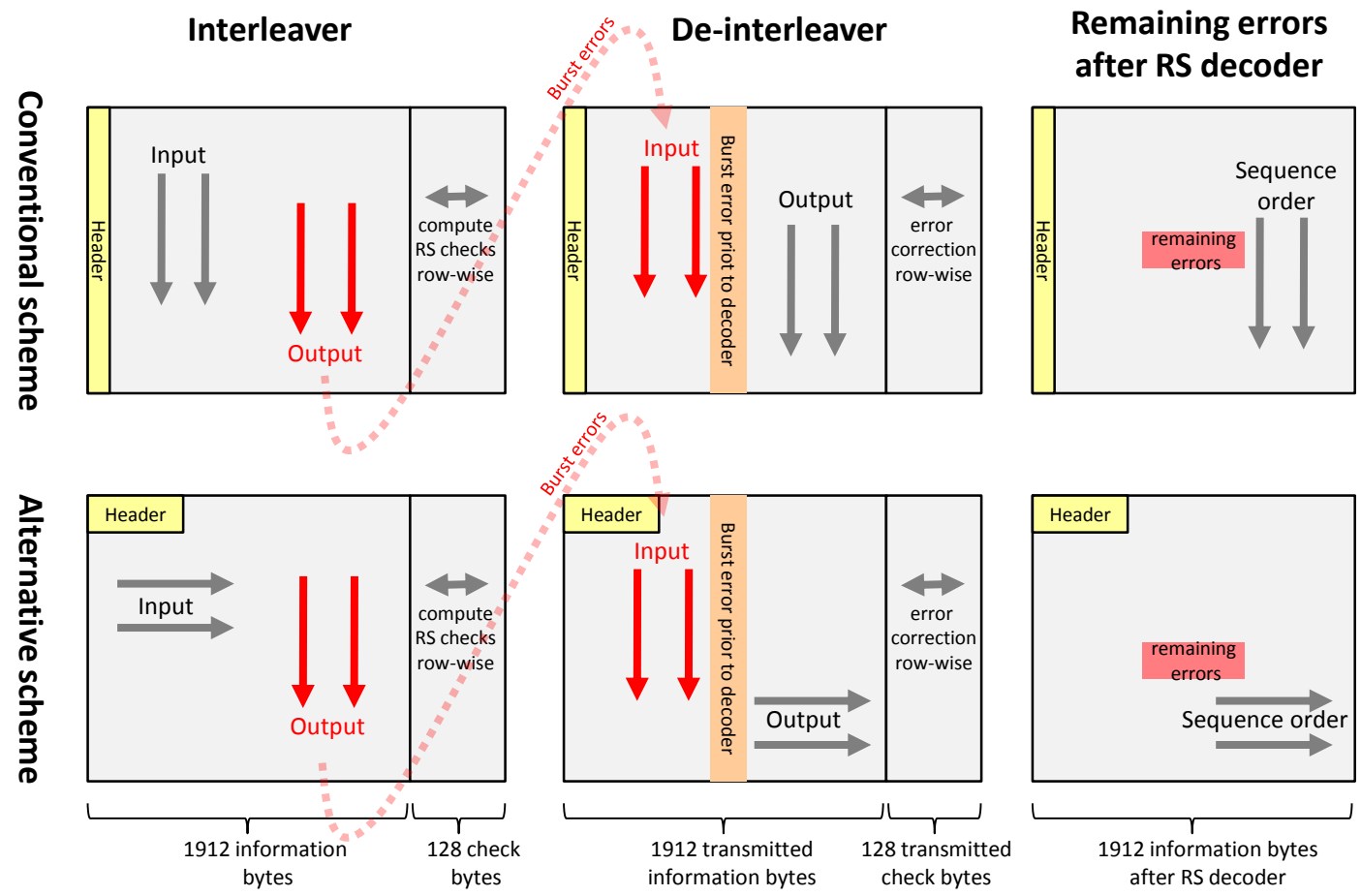

Conventional scheme
implemented in LIAU and DPU,
CCSDS recommendation

Alternative scheme
is superior since
- FHER reduced by a factor of 8
- Interaction with LIAU RS code saves 0.2 dB (if encryption off)

Withdrawn since delay of DPU program too risky

©Tesat-Spacecom GmbH & Co.KG 2010

GEO Frame Structure

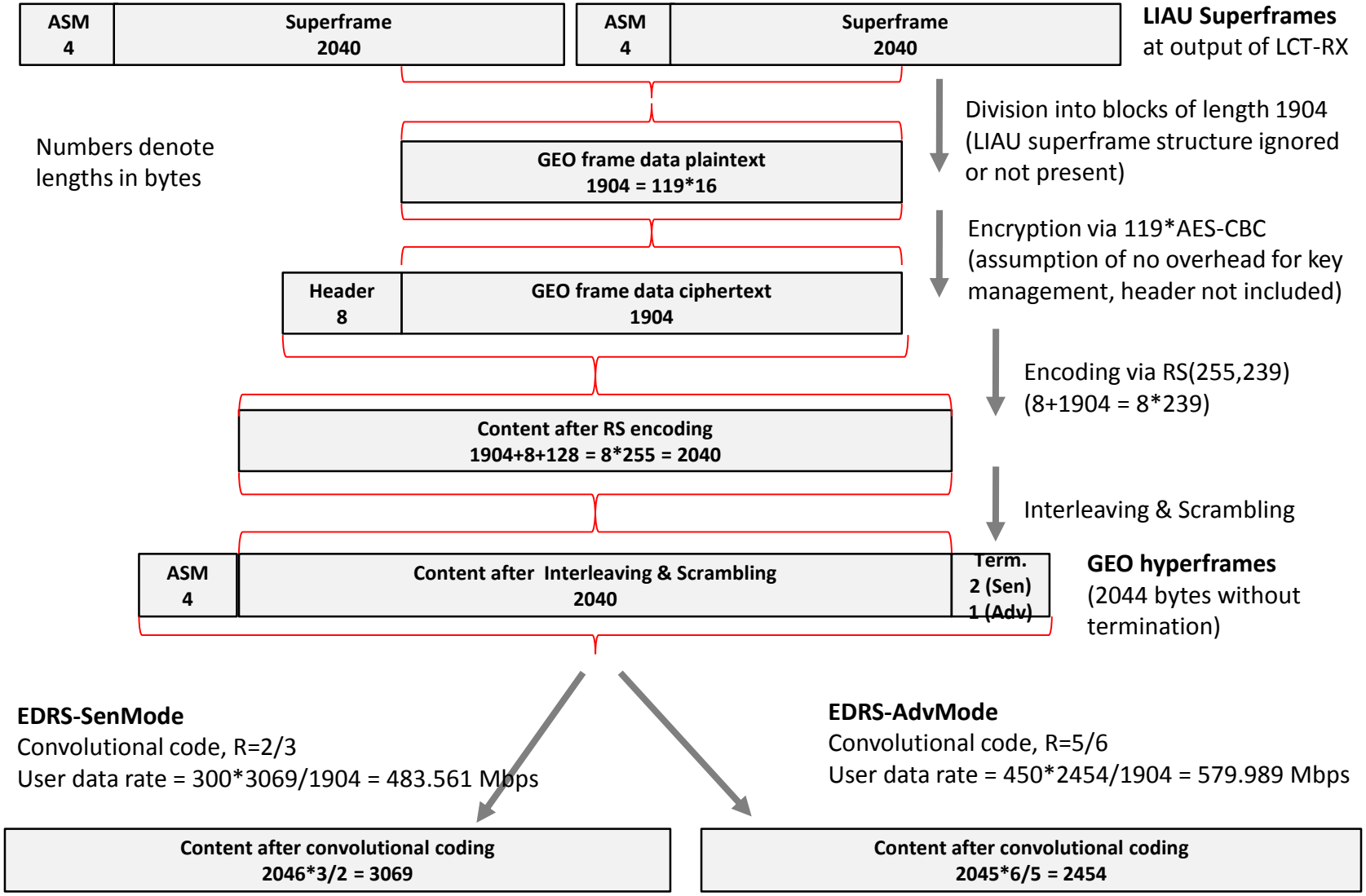

©Tesat-Spacecom GmbH & Co.KG 2010

Ground Station (EDTE) – Functional Architecture

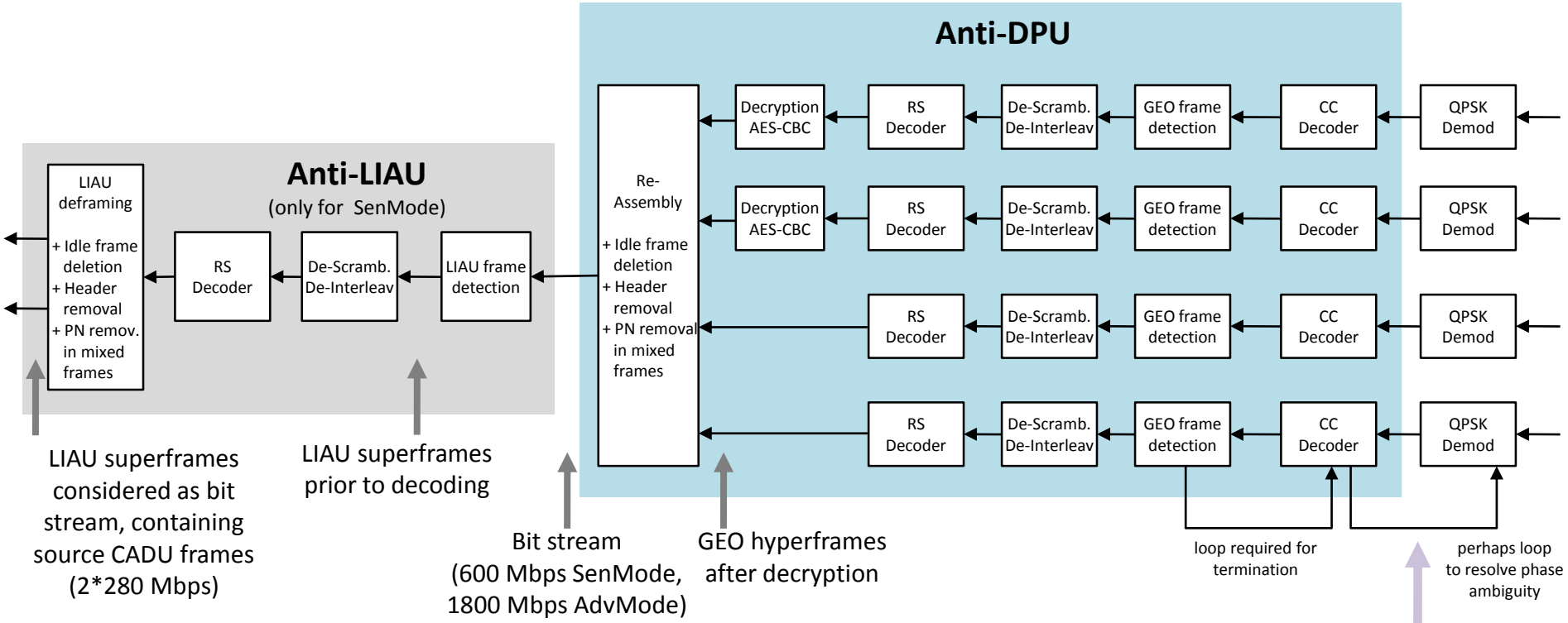

Alternatives for interface Demodulator / Anti-DPU

- 4*600 .000 MSoftSample/s as shown for “standard” approach
- 4*499.756 Mbps if CC decoding shifted from Anti-DPU into Demod
- 4*467.482 Mbps if CC and RS decoding shifted from Anti-DPU into Demod

©Tesat-Spacecom GmbH & Co.KG 2010

System Overview – 9 Coding Schemes & 2 Framing Schemes

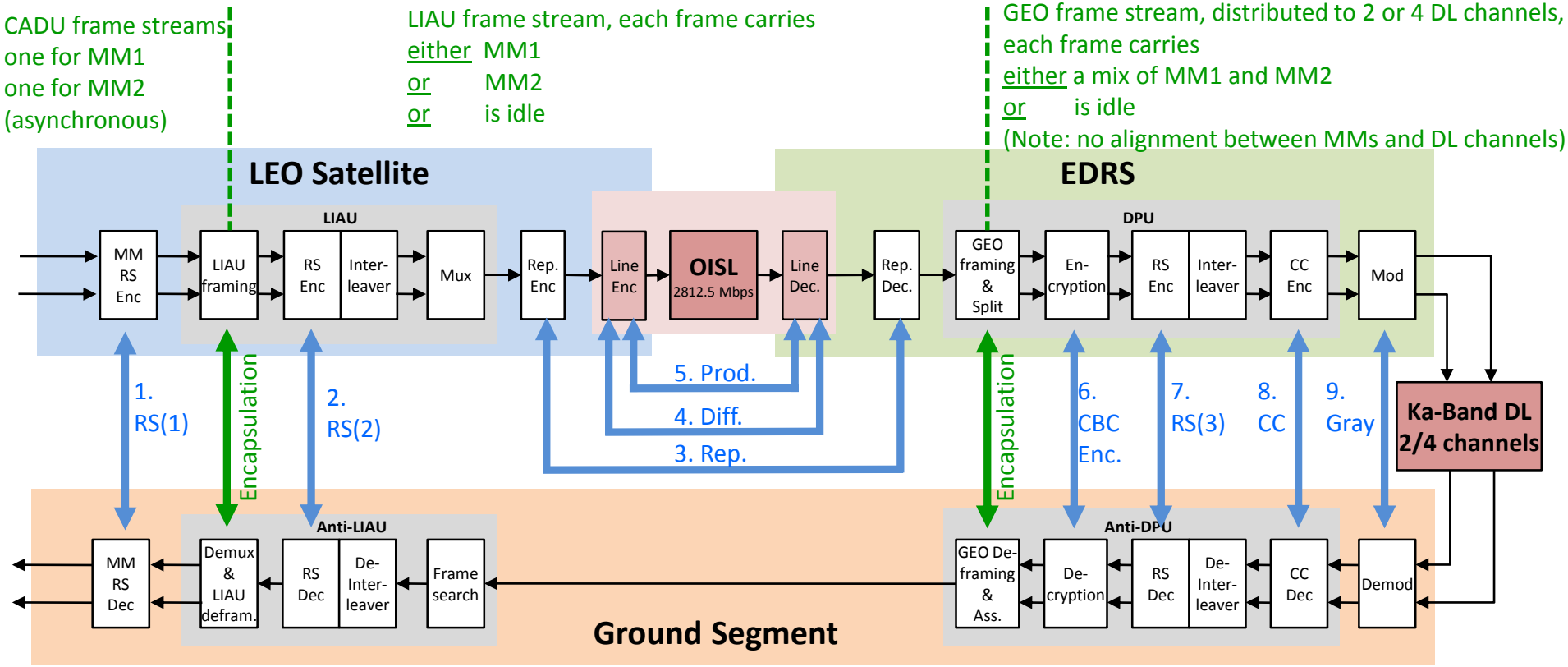

The 9 coding schemes were selected

- regarding technology independence: LEO shall not leave any footprint on GEO
- regarding existing technology (MM, LCT)
- BUT NOT as result of a joint overall optimization!

©Tesat-Spacecom GmbH & Co.KG 2010

Data Rates for Sentinel Mode

Notes: pie charts with true scale
but horizontal bars without true scale

"user data rate" is an ambiguous term since depending on ref.point

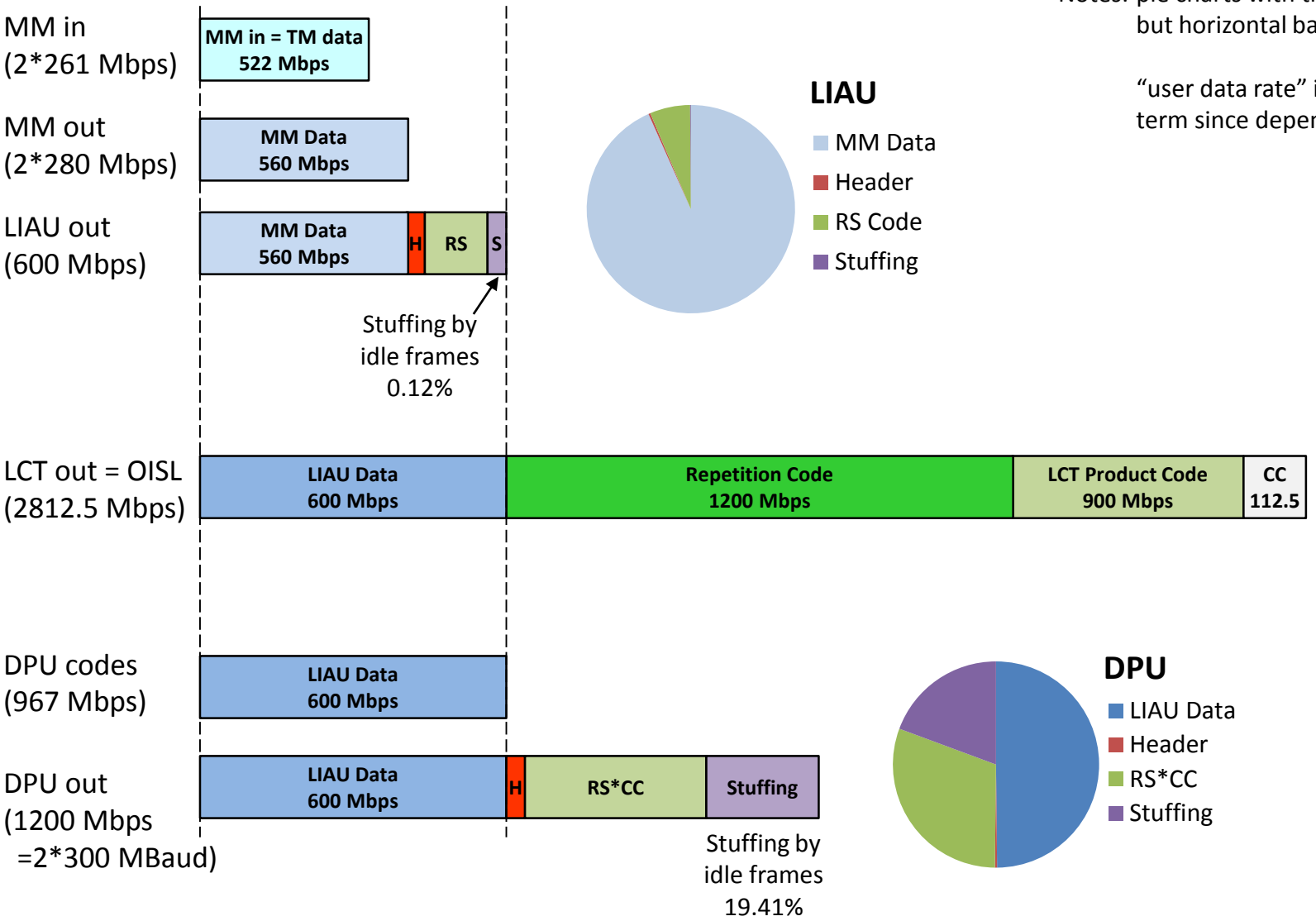

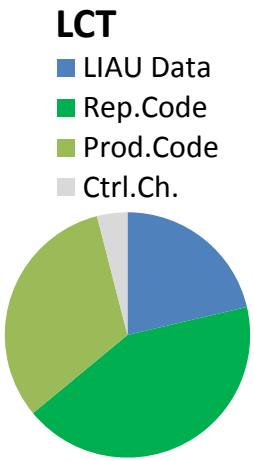

Performance Assessment – Simulation Approach

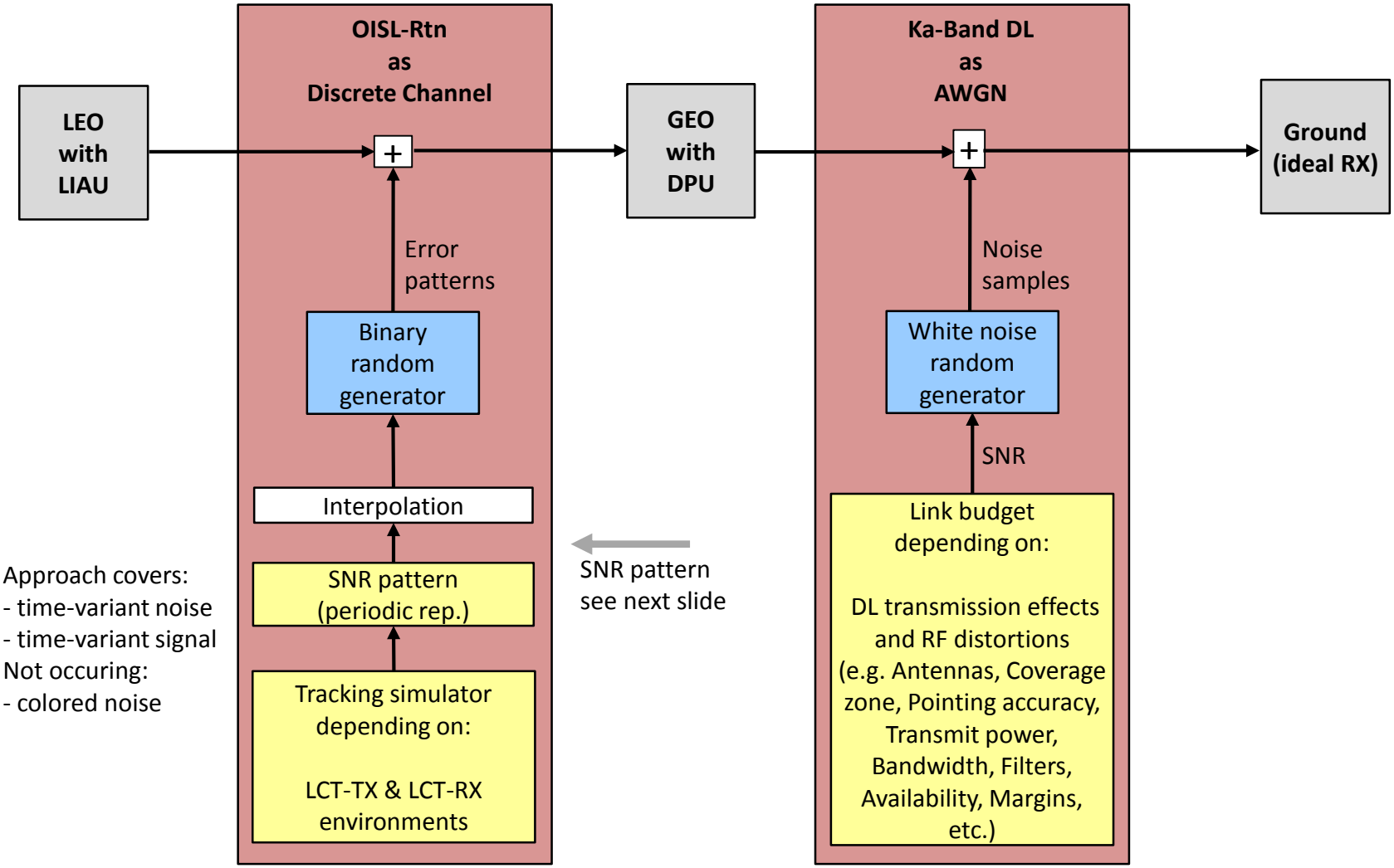

Approach covers:
- time-variant noise
- time-variant signal

Not occuring:
- colored noise

©Tesat-Spacecom GmbH & Co.KG 2010

LCT – External View

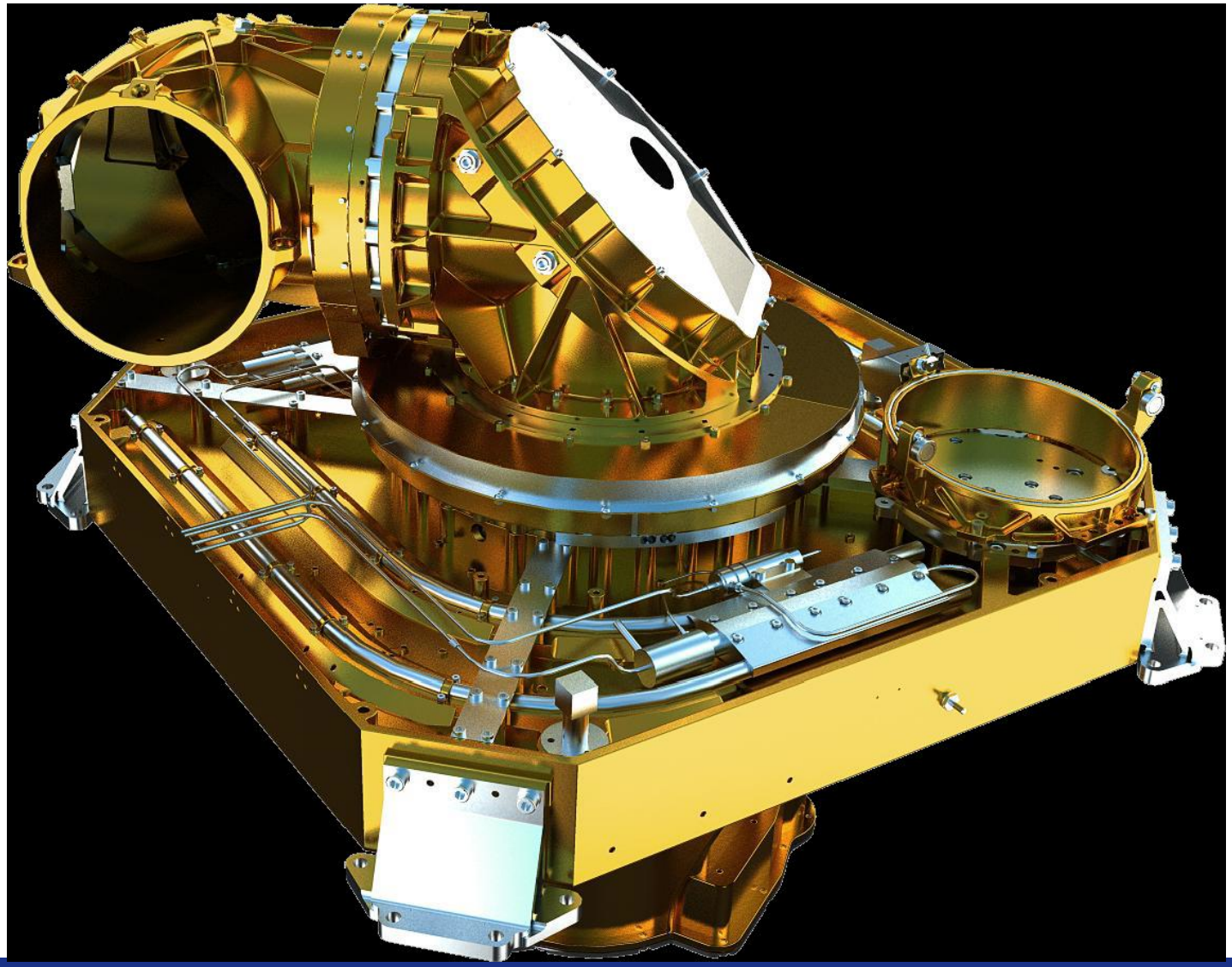

©Tesat-Spacecom GmbH & Co.KG 2010

LCT Block Diagram

Optical beamwidth = 7µrad (compensation of µvibs)
LEO flies 2km = 50µrad per round trip (pointing ahead)

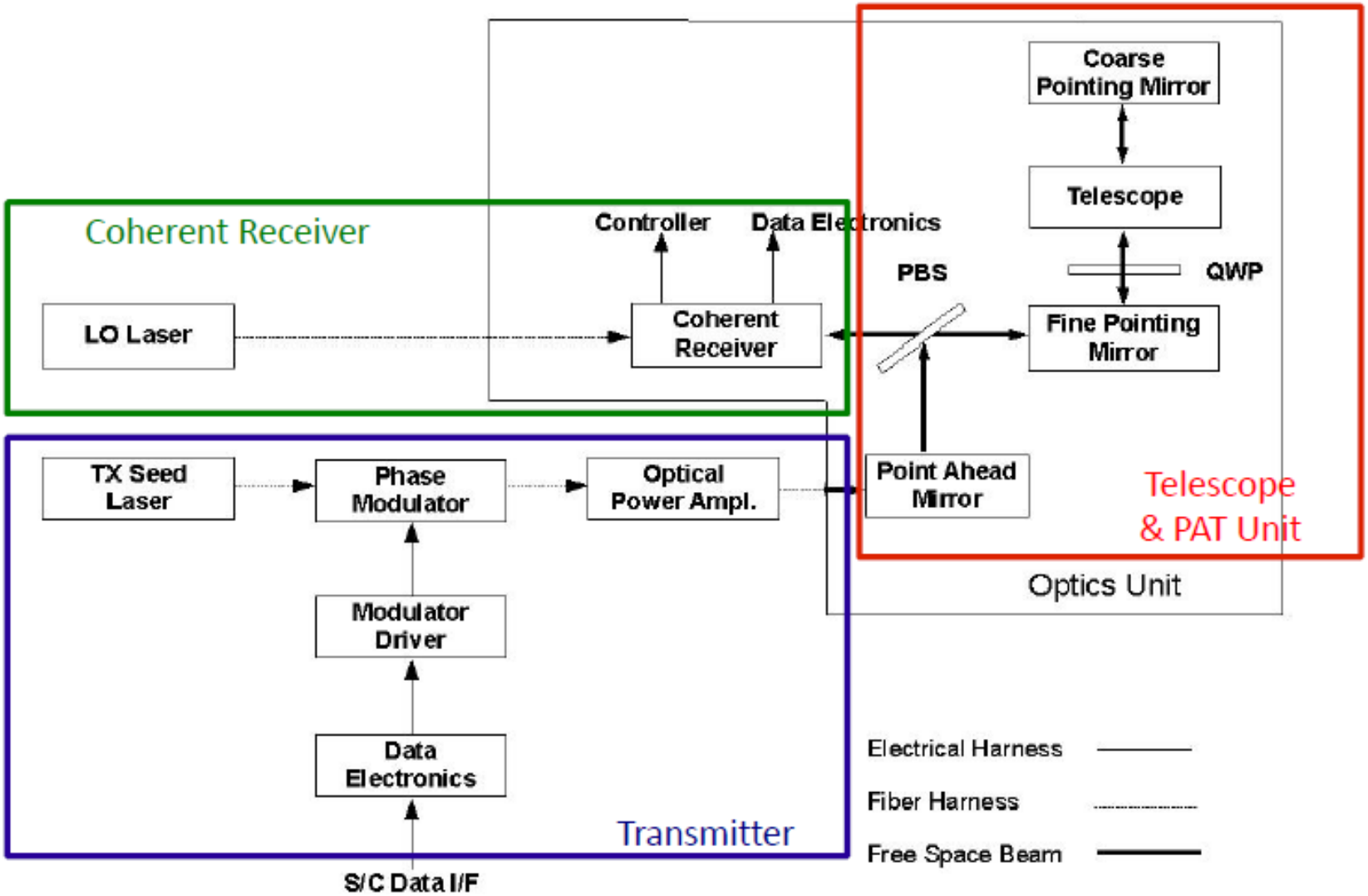

©Tesat-Spacecom GmbH & Co.KG 2010

OISL Link Budget ⇨ OISL Model

Abstract model: **BSC** (independent errors) ⇔ **AWGN** (white noise): $BER_0 = Q(\sqrt{2 \cdot SNR_{OISL}})$

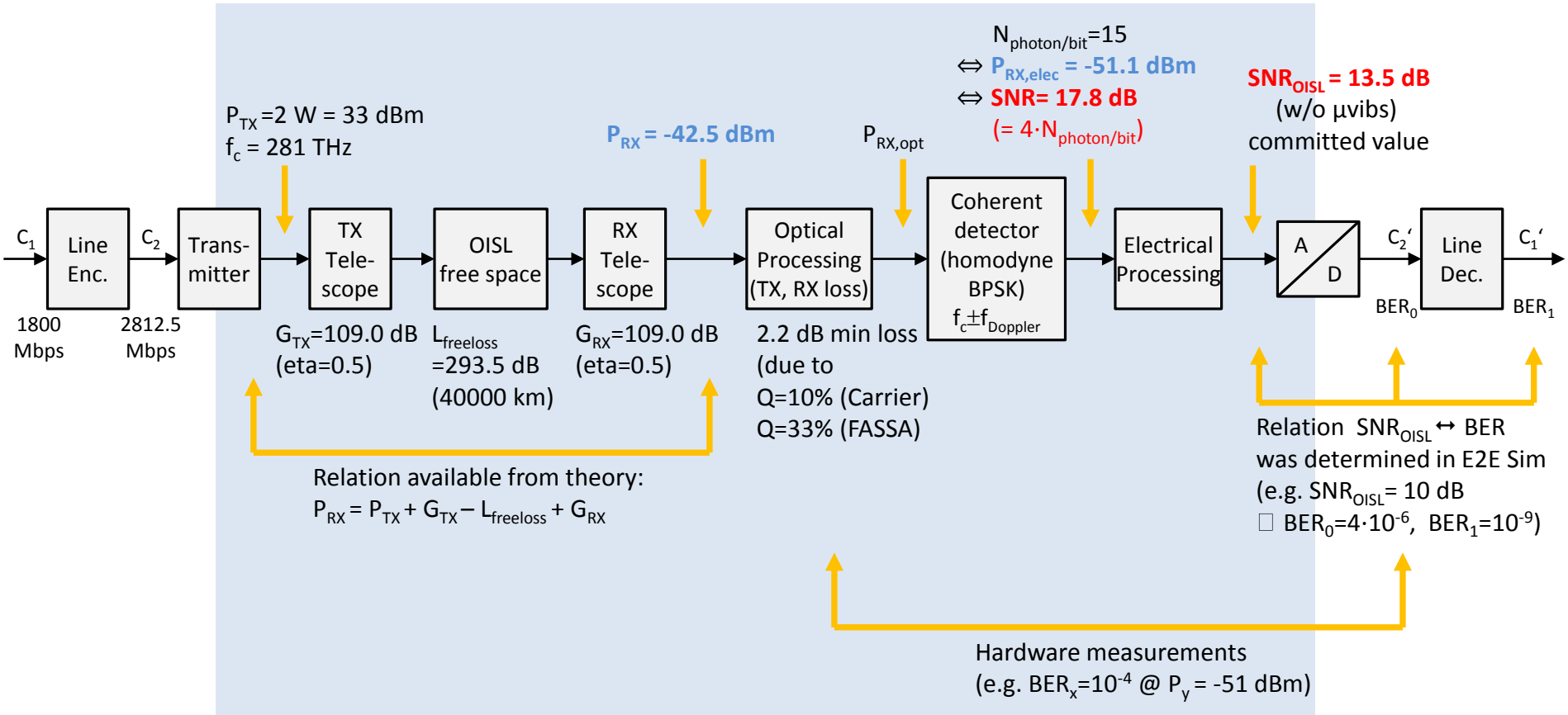

©Tesat-Spacecom GmbH & Co.KG 2010

01_SNR Pattern (over time of ≈7850 ms)

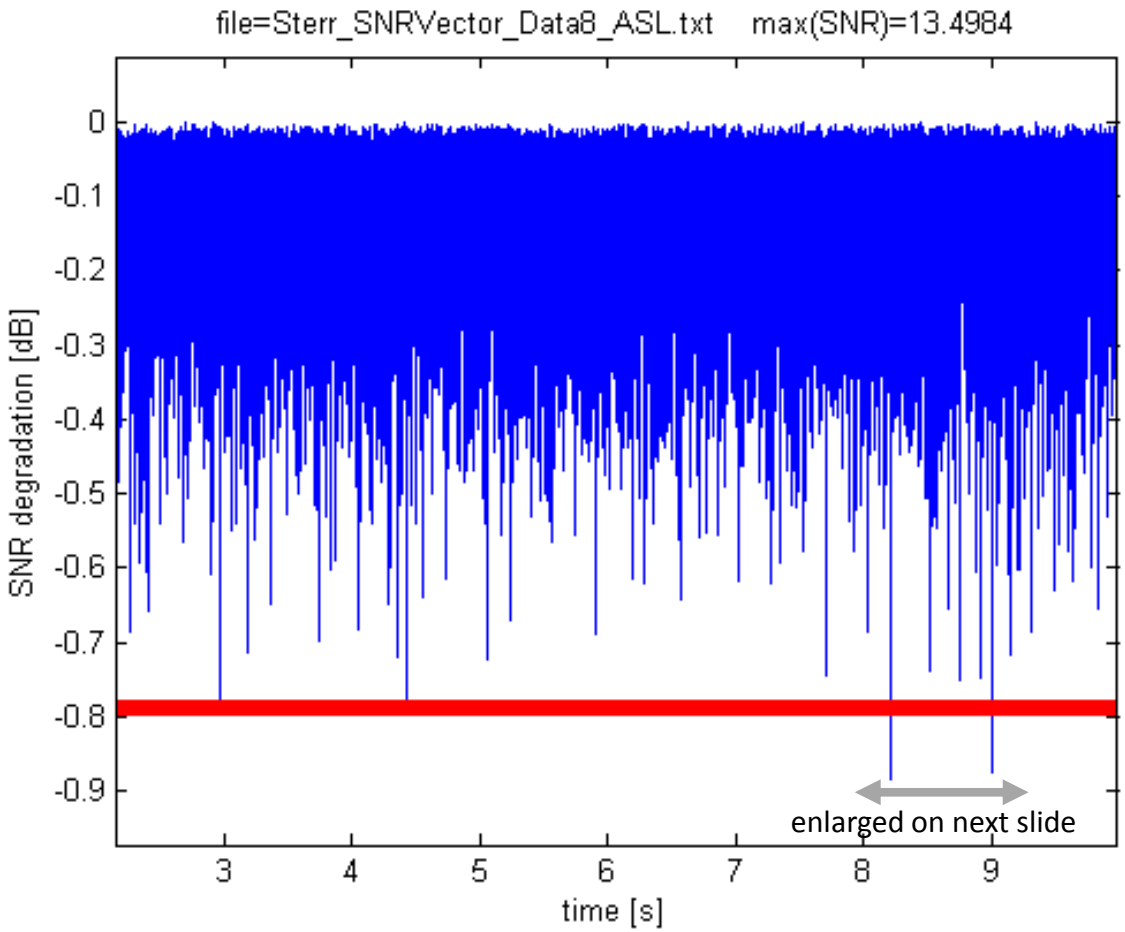

Conclusions:

- Pattern is not long enough to be fully representative (periodic repetition)

©Tesat-Spacecom GmbH & Co.KG 2010

01_SNR Pattern (zoom to time of ≈50 ms)

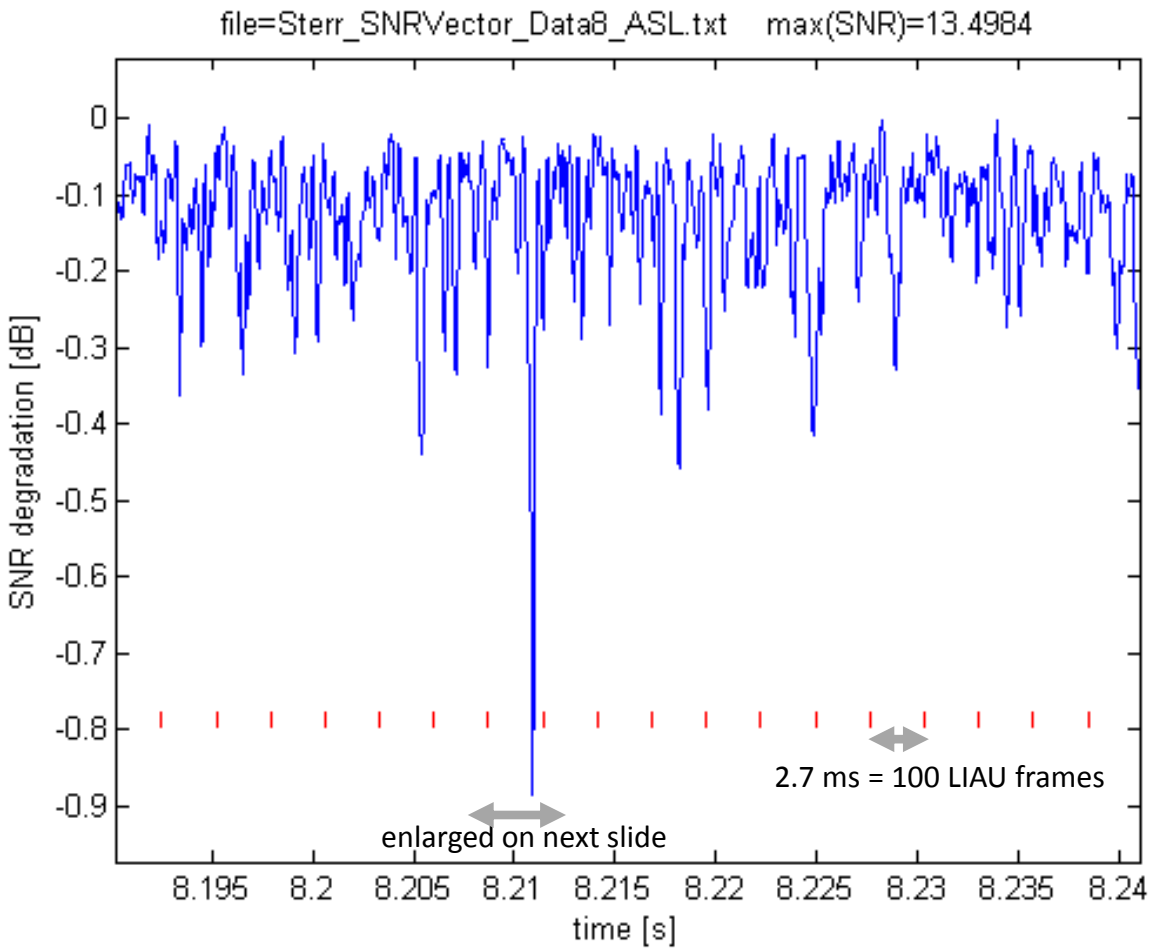

Conclusions: none

©Tesat-Spacecom GmbH & Co.KG 2010

01_SNR Pattern (zoom to time of ≈3.5 ms)

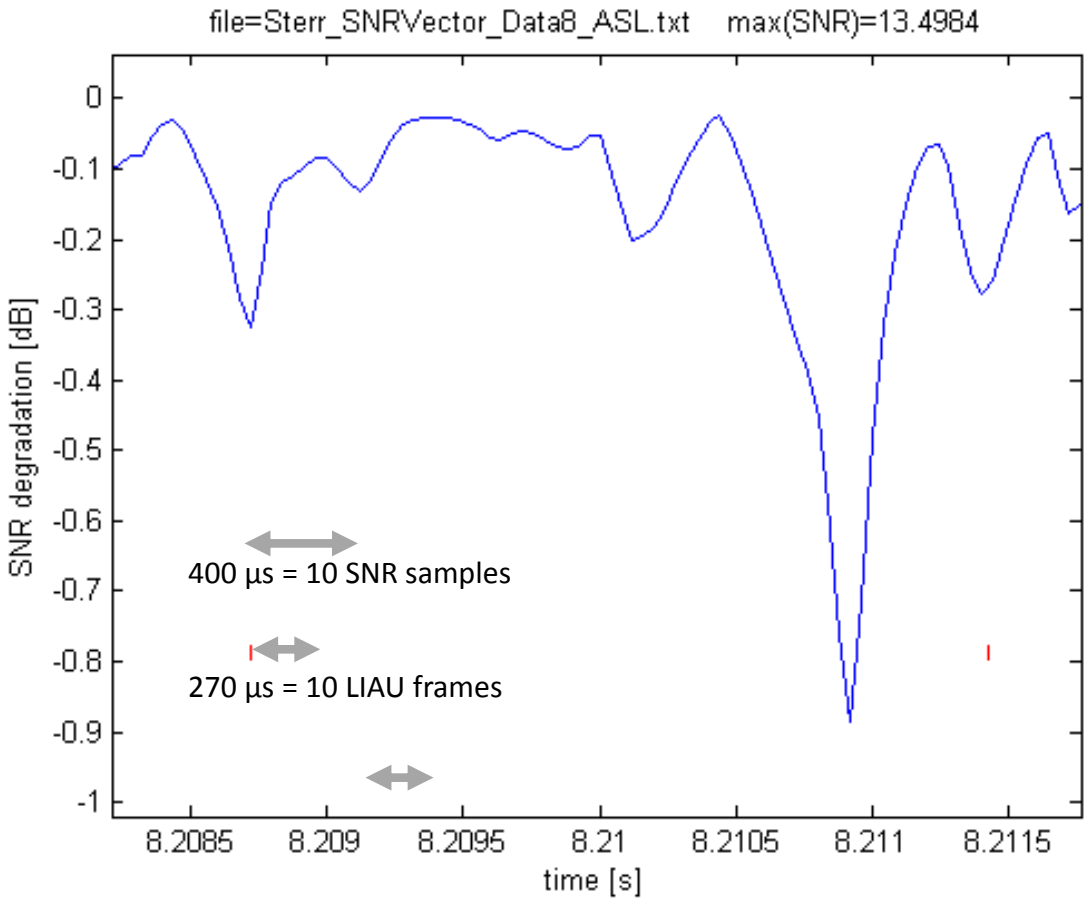

Conclusions:

- SNR pattern resolution T_{samp}=40 µs (f_{samp}=25 kHz) is sufficient
- OISL is slowly time-variant (almost time-invariant wrt LIAU frame duration)

©Tesat-Spacecom GmbH & Co.KG 2010

Simulation Results (1 of 3) –
BER and FER over SNR_{OISL} (DL perfect, Sentinel Mode)

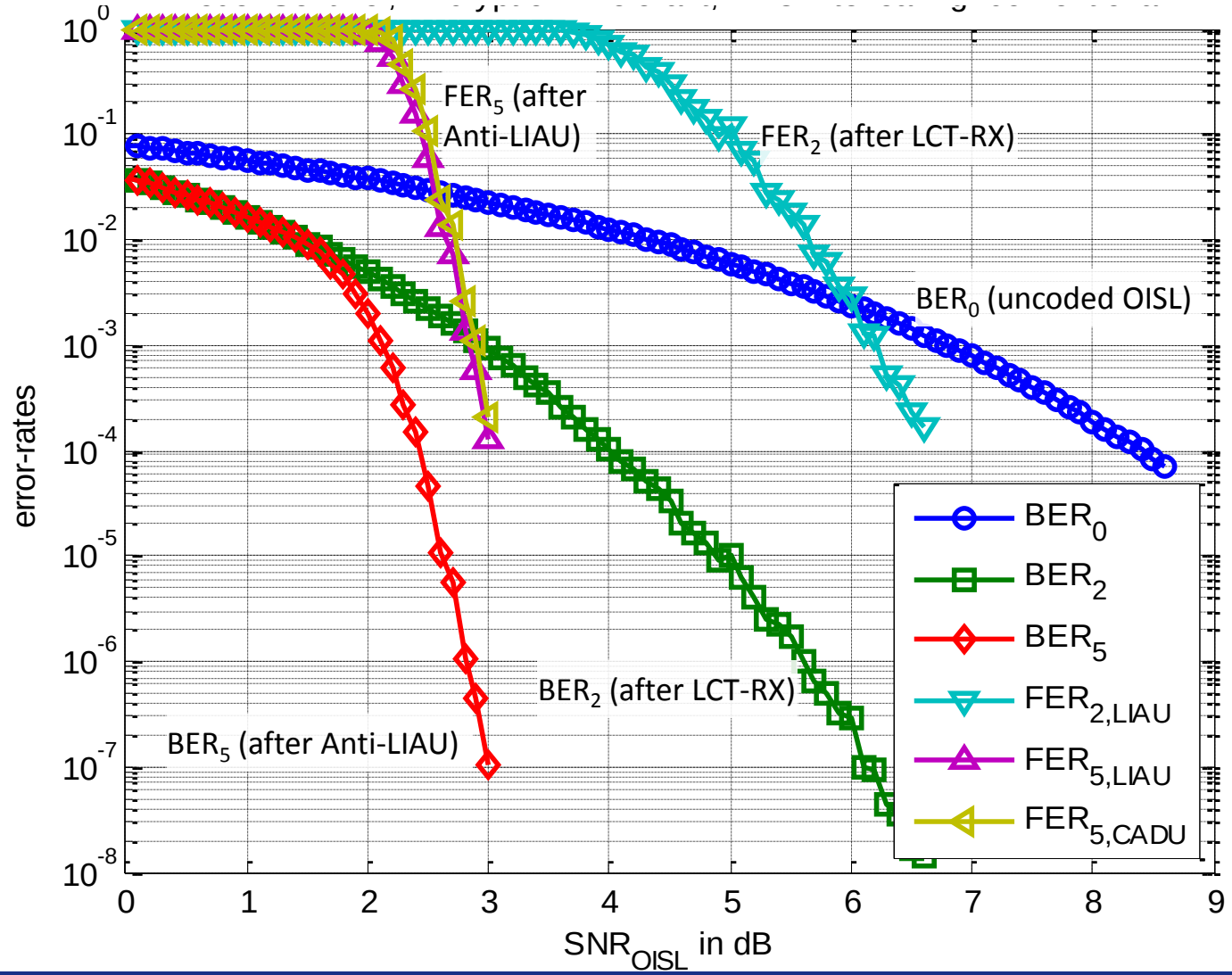

The validation concept is based on (among other methods):

1) Matlab code checks

2) Considerations of relations between

- different error rates at same reference point
- same error rate at different reference points

Analytical results can be derived for many of these relations, but not for all.

©Tesat-Spacecom GmbH & Co.KG 2010

Simulation Results (2 of 3) –
FER over SNR_{DL} (OISL perfect, Sentinel & Advanced Mode)

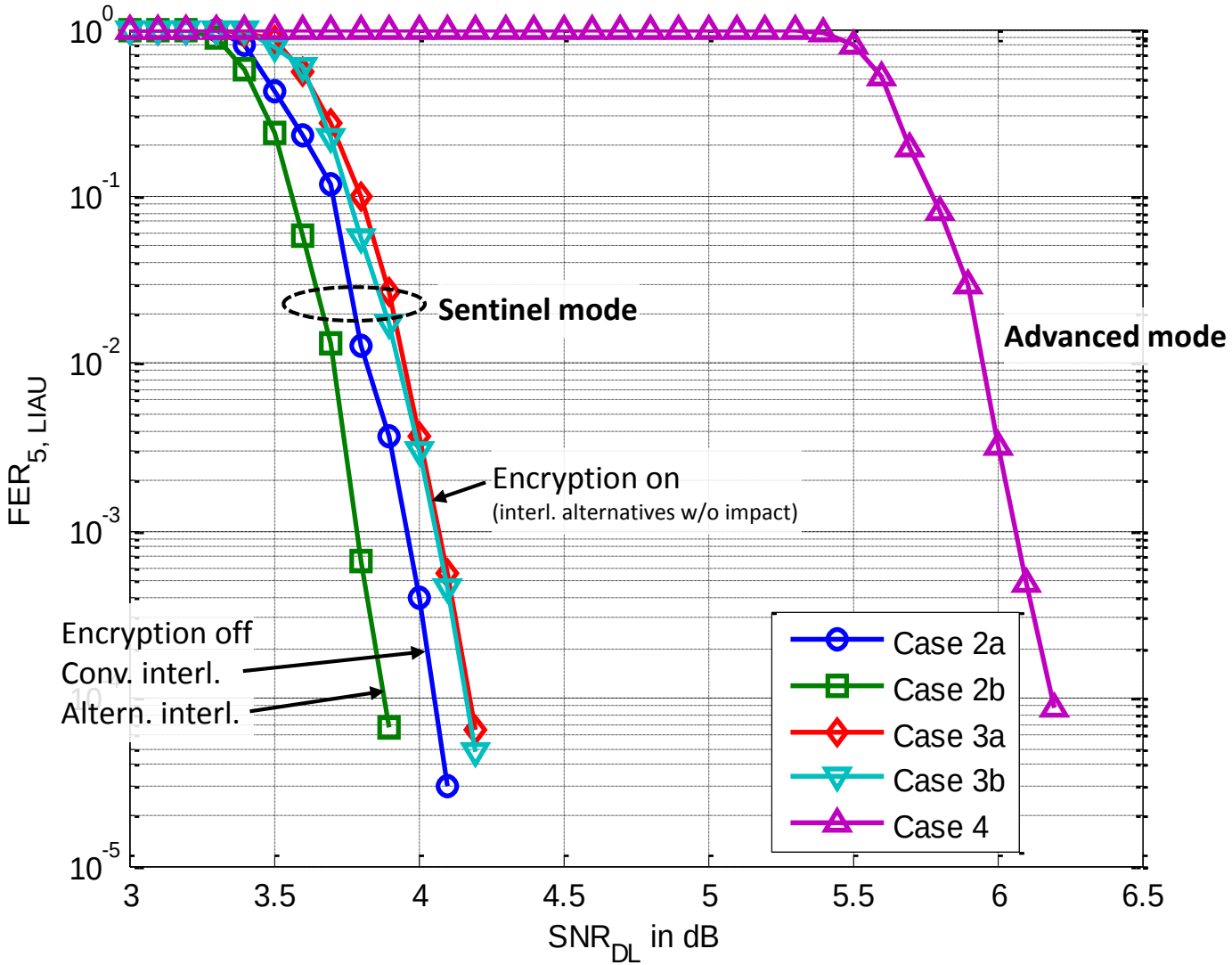

©Tesat-Spacecom GmbH & Co.KG 2010

Simulation Results (3 of 3) –
FER over SNR_{OISL} and SNR_{DL} (Sentinel Mode)

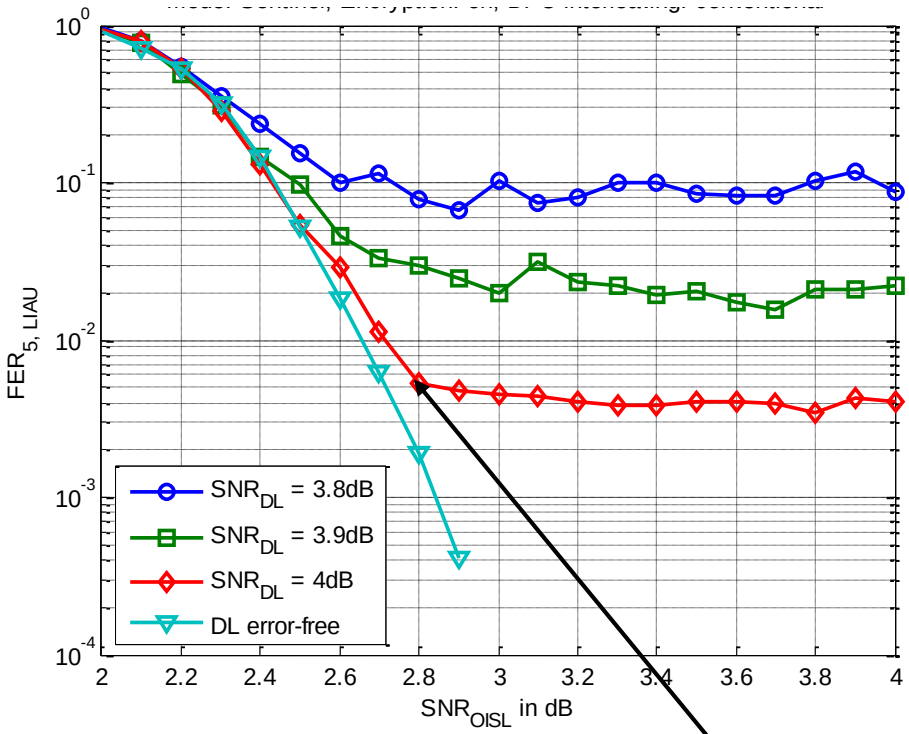

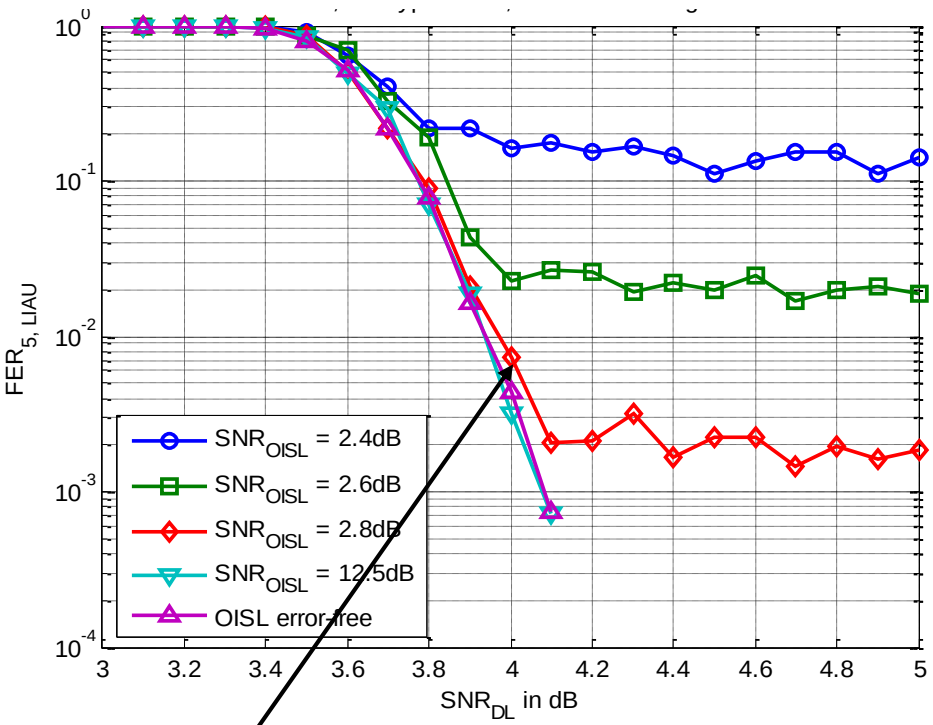

Example: $FER_{5,LIAU} = 0.005$
@ SNR_{OISL}=2.8 dB & SNR_{DL}=4.0 dB

©Tesat-Spacecom GmbH & Co.KG 2010

Link Budgets Summary (Required SNR @ target-FER for Sentinel/Advanced mode)

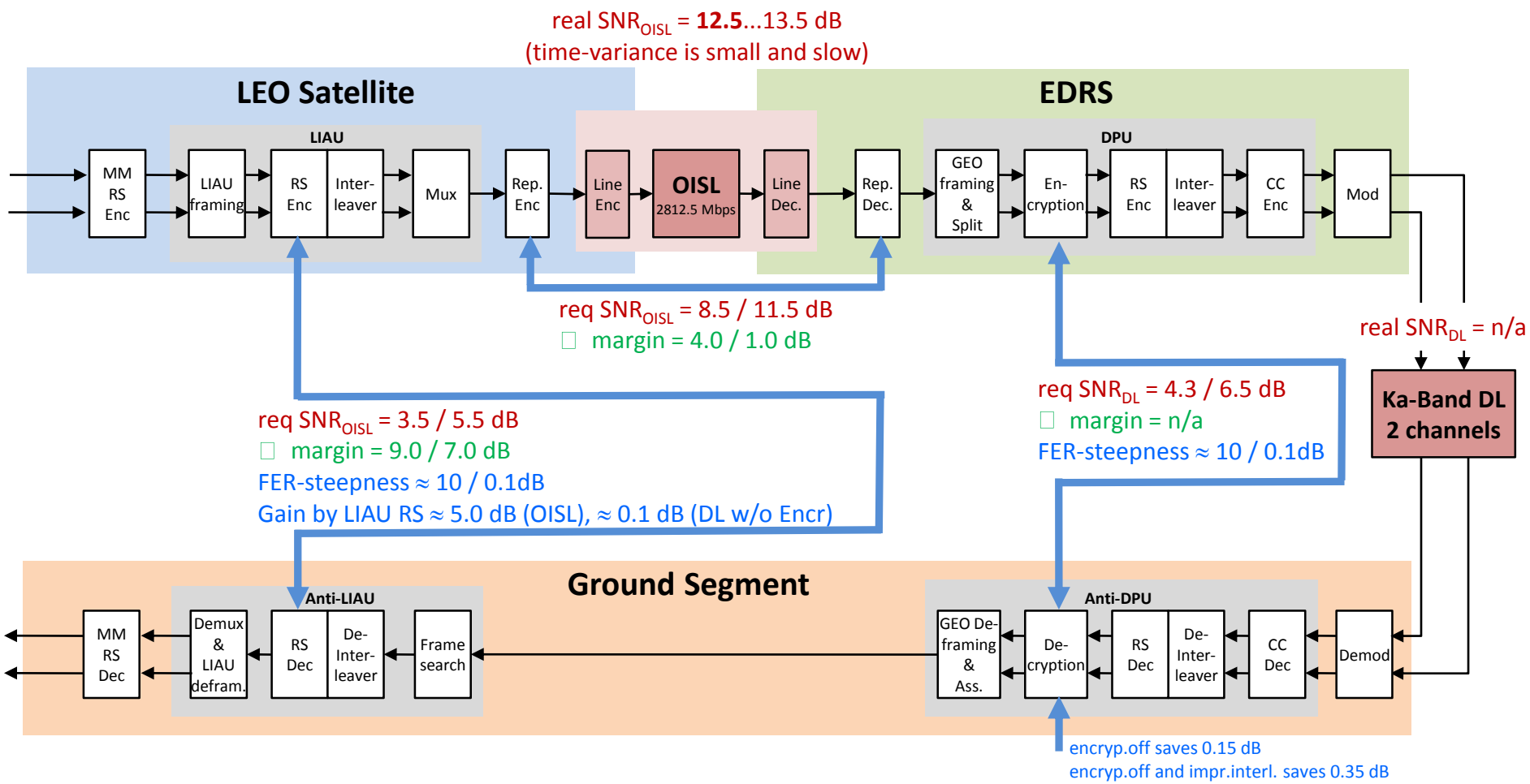

©Tesat-Spacecom GmbH & Co.KG 2010

Review of Error-Correction-Code Capabilities

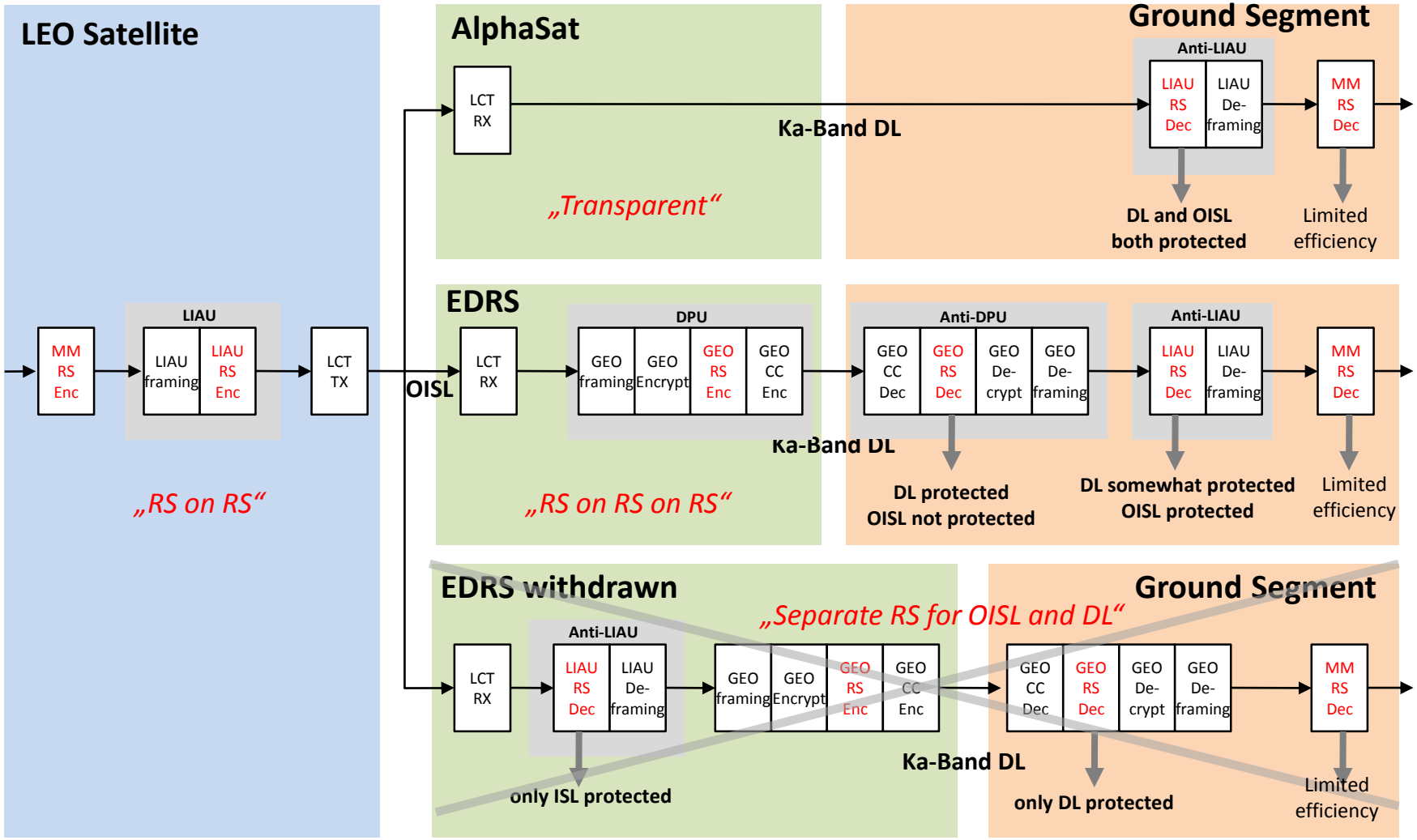

DPU Modes – Switching State Diagram

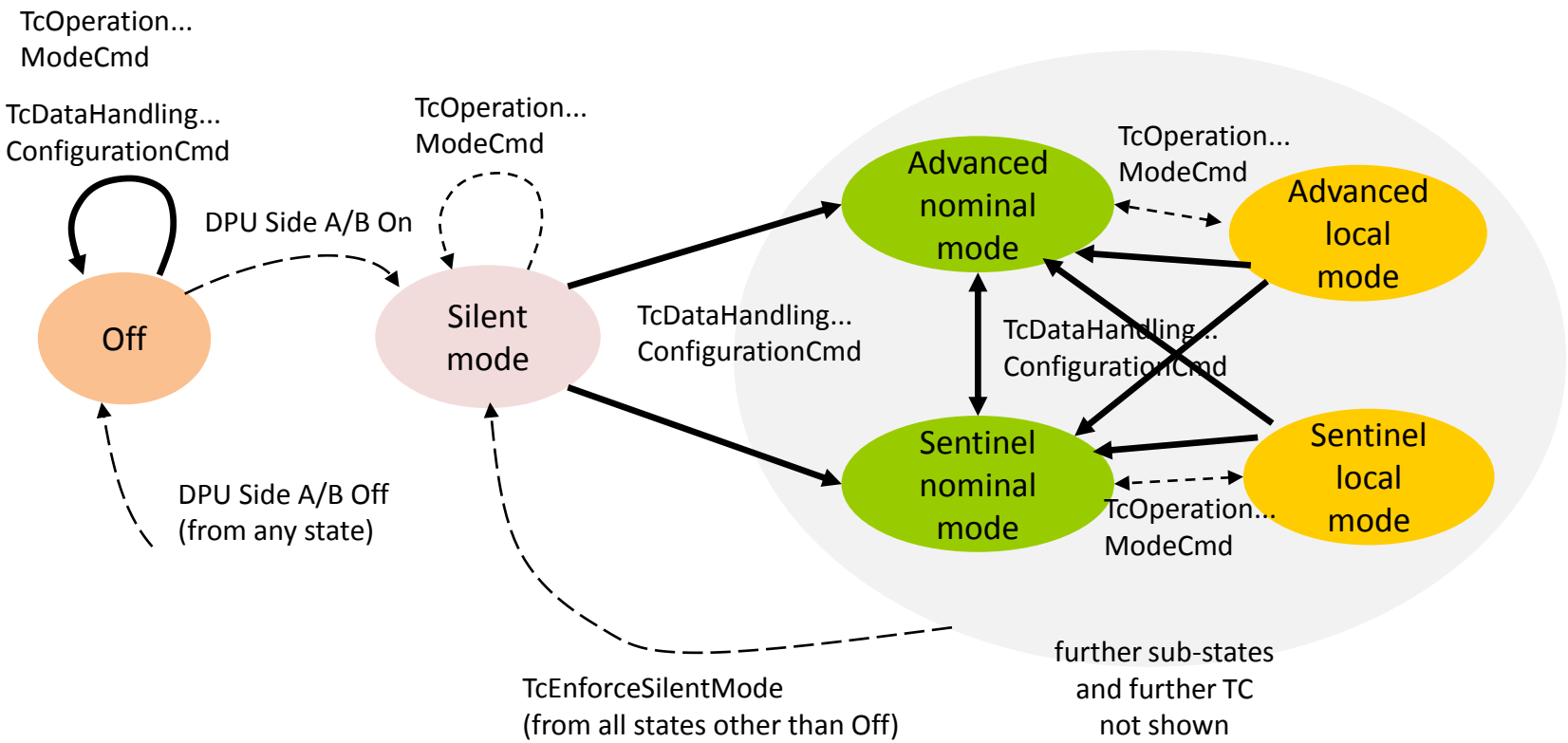

©Tesat-Spacecom GmbH & Co.KG 2010

DPU-Related Messages required for Return Service

Ground | **DPU**

Prepare new session

TcDataHandlingConfigurationCmd
(ModeID/2, Key/256, IV/128, SessionID/8)

Check ModeID
Reset and apply
(if check was OK, otherwise ignore)
Valid till next TcDataHandlingConfigurationCmd
Default: Encryption=normal
Default: State=nominal

Wait for Ack

TmDataHandlingConfigurationAck
(binary status info/2 {check OK, check not OK, void})

Select encryption mode
{off, normal, only idle all encryp.}

TcEncryptionCmd
(ternary status info/2 {off, normal, only idle})

Apply
Valid till next TcEncryptionCmd
or till next TcDataHandlingConfigurationCmd

Select operation mode
{use or ignore input from LCT,
i.e. nominal or local state}

TcOperationModeCmd
(binary status info/1 {use, ignore})

Apply
Valid till next TcOperationModeCmd
or till next TcDataHandlingConfigurationCmd

Monitor input from LCT

TmDataAvailableFromLct (regularly TM)
(quaternary status info/2
{600Mbps, 1800Mbps, unrecog., unavail.})

Up-to-date info
on OISL status available

Legend: field/x means x=length of field
{a,b,..} denotes attained values of field

©Tesat-Spacecom GmbH & Co.KG 2010

DPU Architecture state machine and protocol view

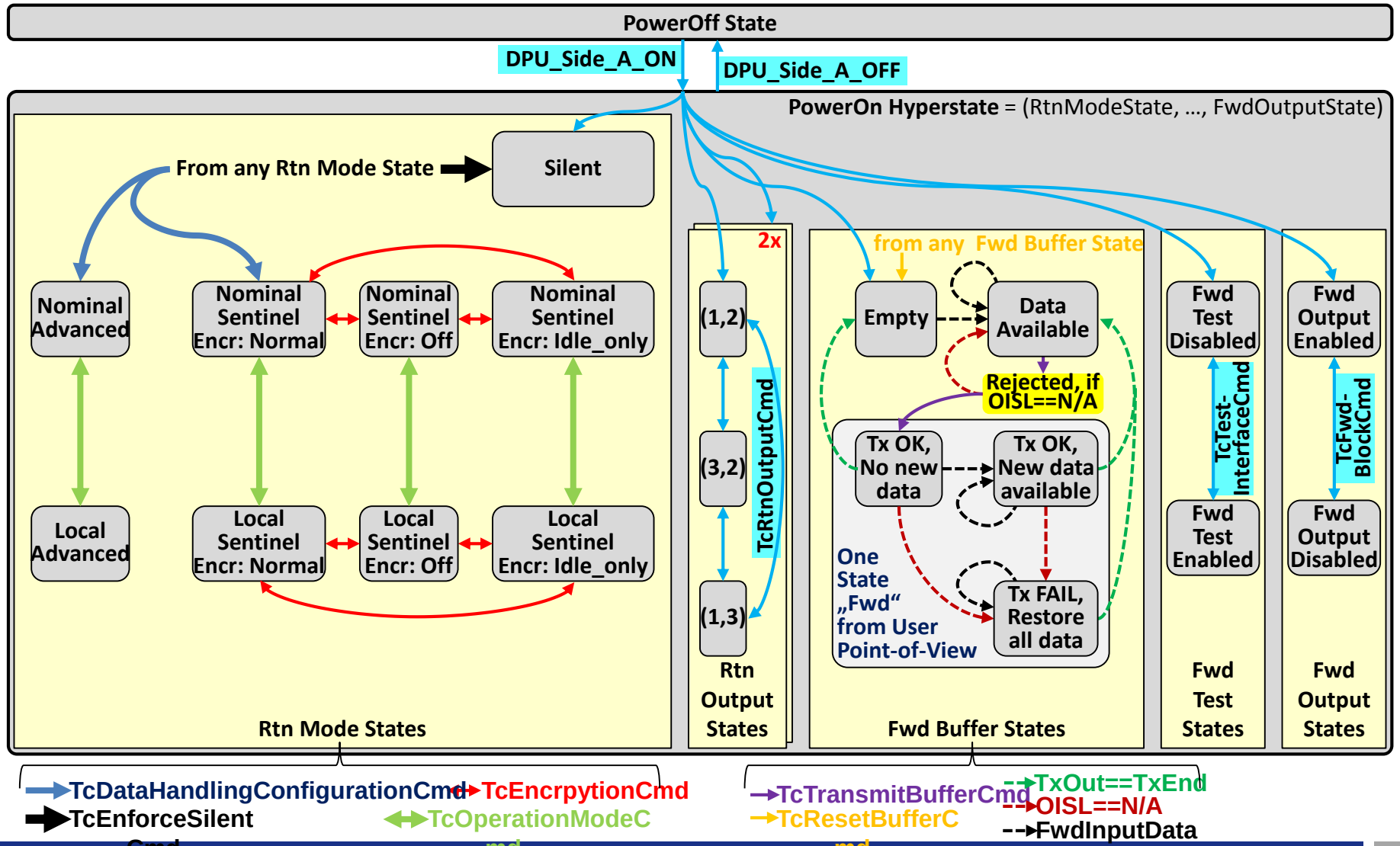

©Tesat-Spacecom GmbH & Co.KG 2010

EDRS-A Architecture

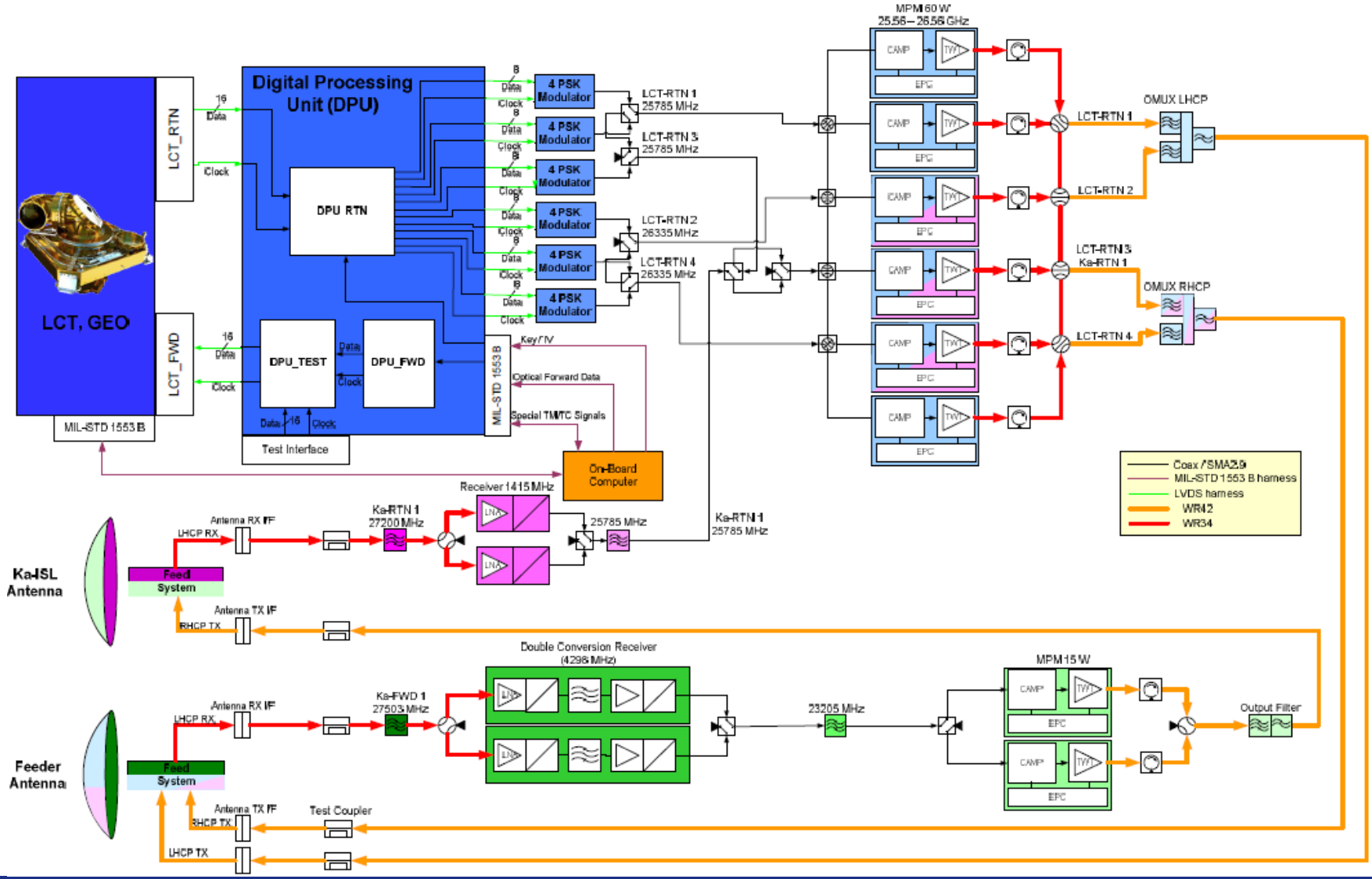

EDRS-A External Configuration

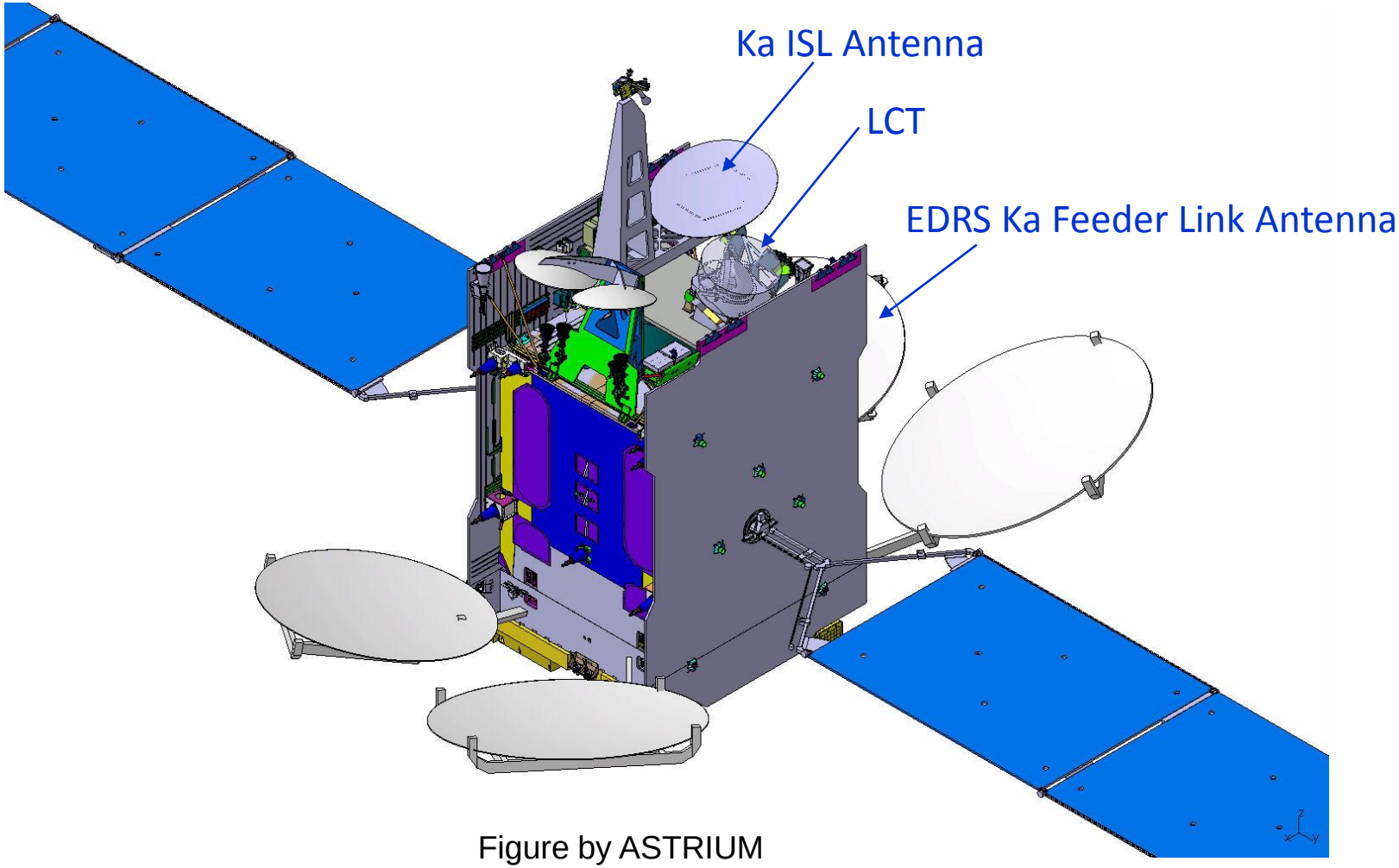

Figure by ASTRIUM Satellites

©Tesat-Spacecom GmbH & Co.KG 2010

EDRS – Contractual Setup

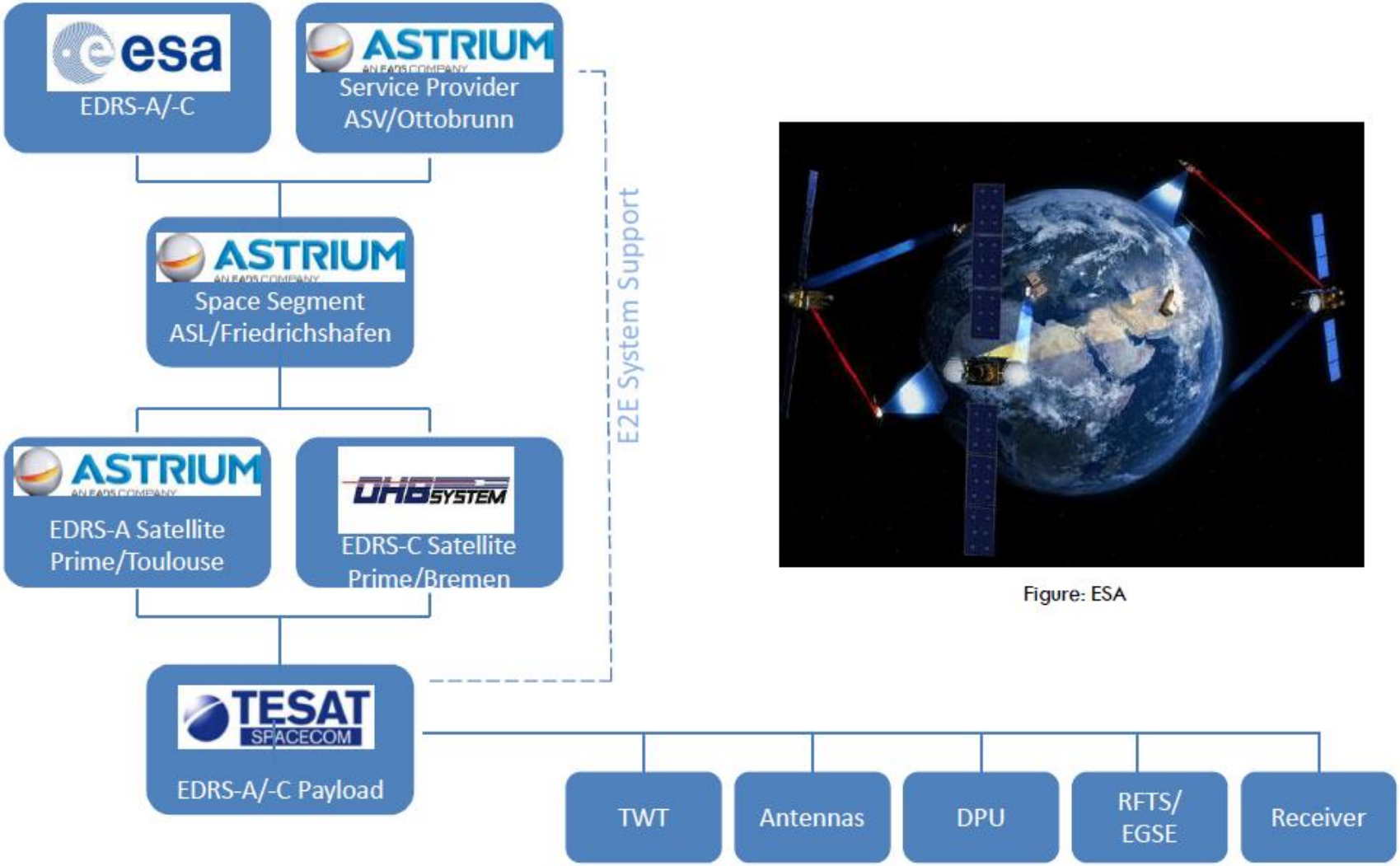

Figure: ESA

©Tesat-Spacecom GmbH & Co.KG 2010

Allgemeine Architektur einer Kommunikations-Nutzlast

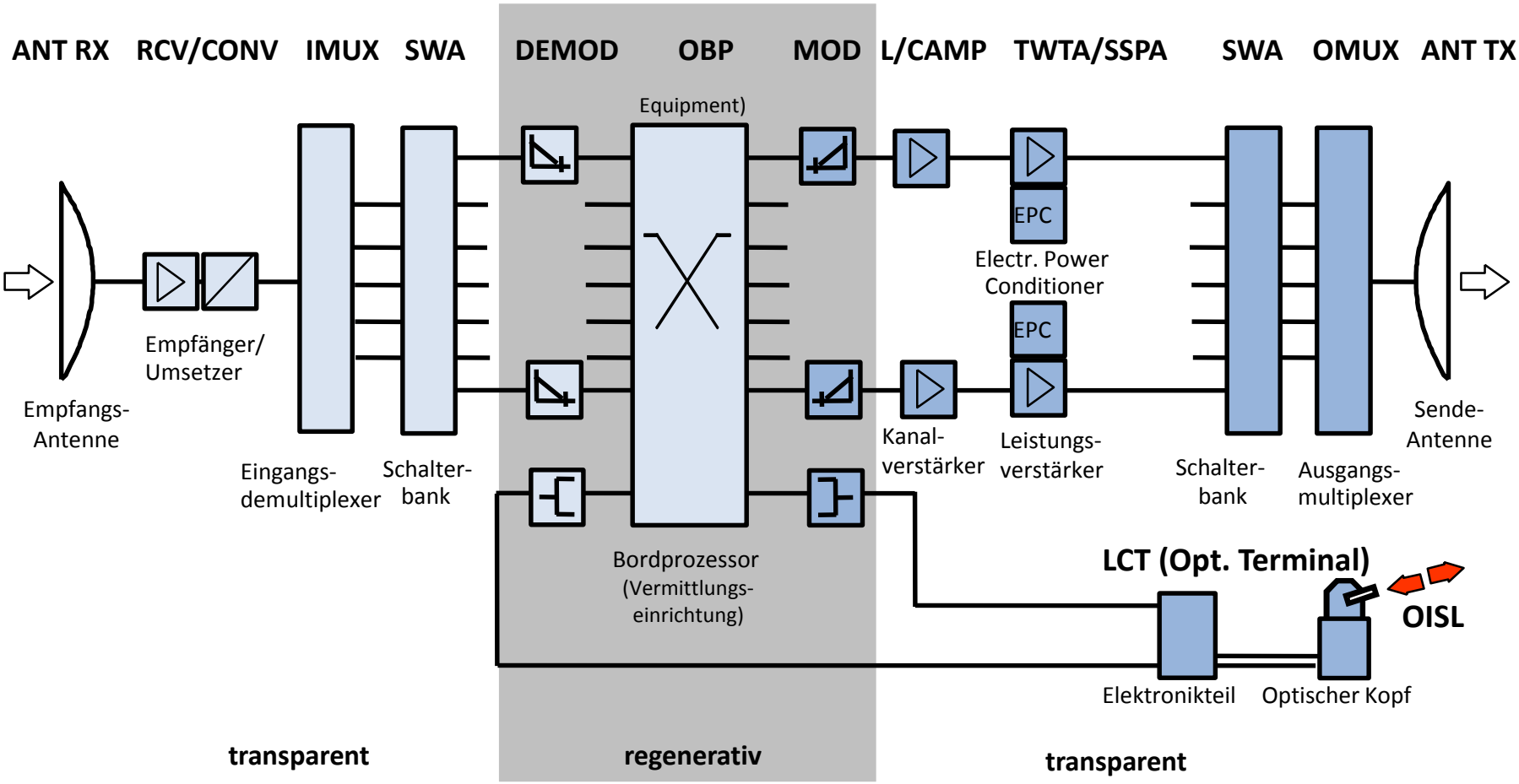

Beispiel H2Sat IOV-Nutzlast

(Stand 2010)

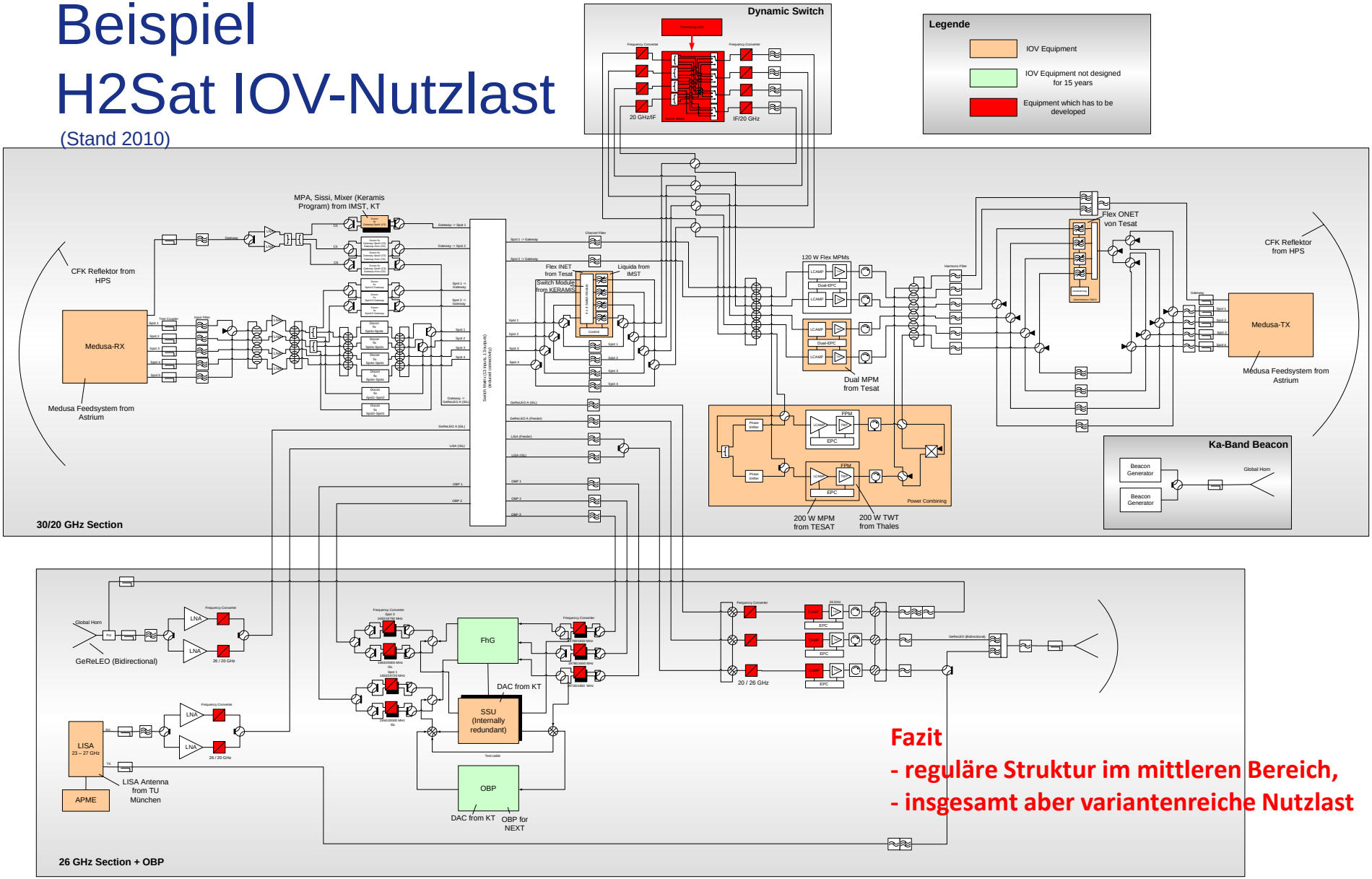

Fazit

- reguläre Struktur im mittleren Bereich,

- insgesamt aber variantenreiche Nutzlast

©Tesat-Spacecom GmbH & Co.KG 2010

ReSAT-Konfiguration (Basis)

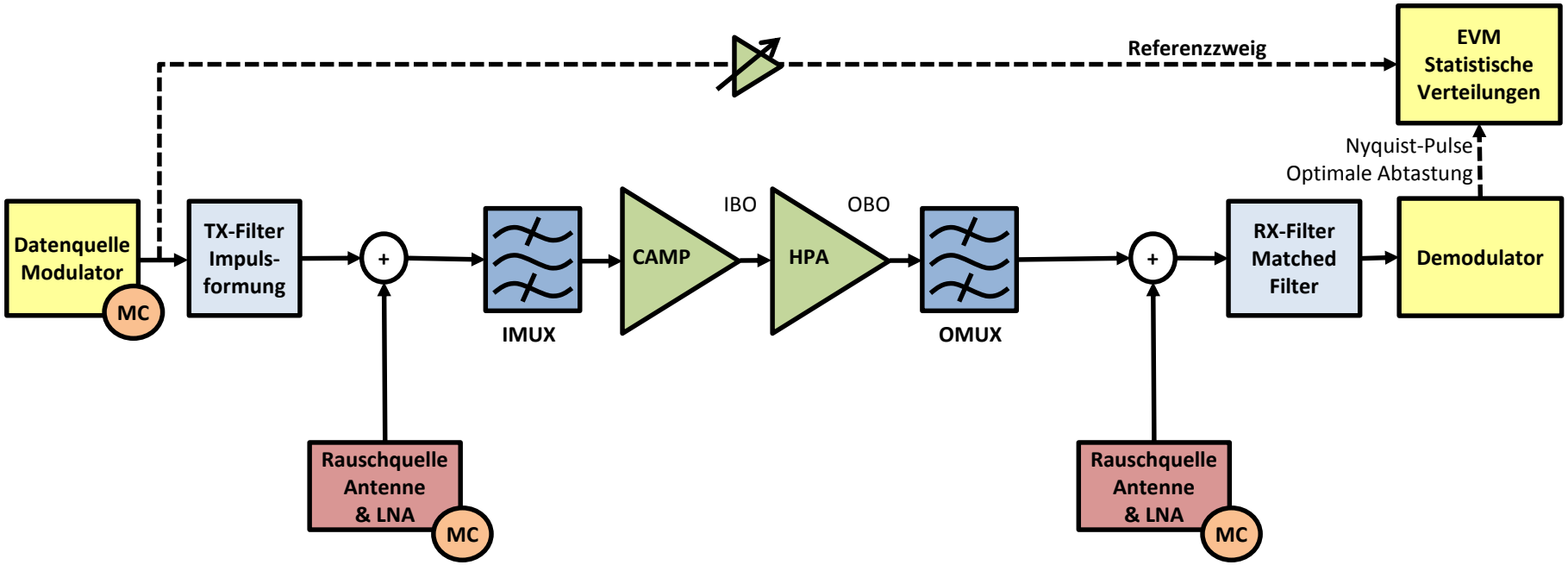

Bodensegment	Repeater	Bodensegment
DL-Subsystem		Bodensegment

Zeit	Frequenz	Zeit	Frequenz	Zeit

ReSAT

©Tesat-Spacecom GmbH & Co.KG 2010

ReSAT-Konfiguration (Erweitert)

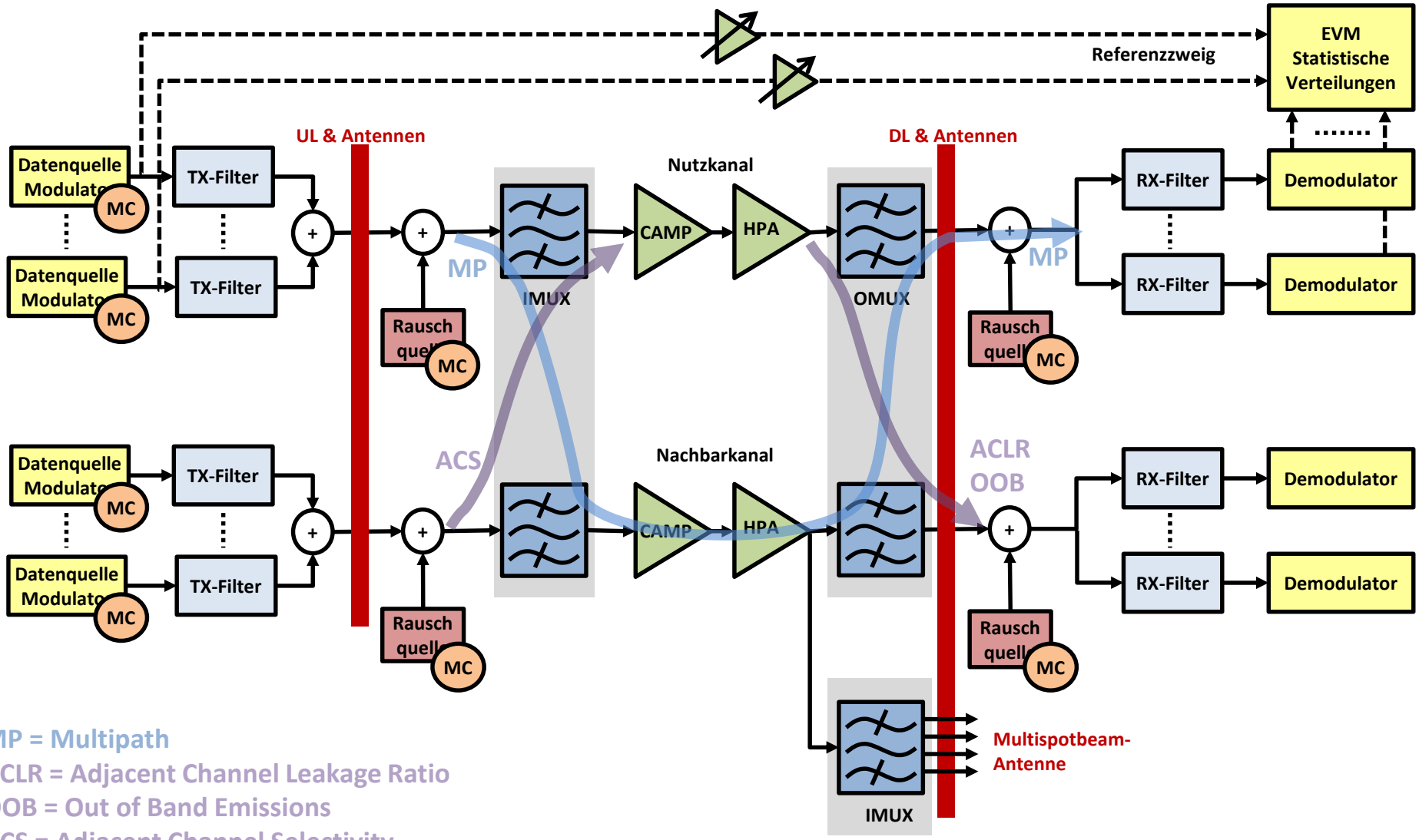

MP = Multipath
ACLR = Adjacent Channel Leakage Ratio
OOB = Out of Band Emissions
ACS = Adjacent Channel Selectivity

©Tesat-Spacecom GmbH & Co.KG 2010

Beispiel eines Frequenz-Zeit Übergangs

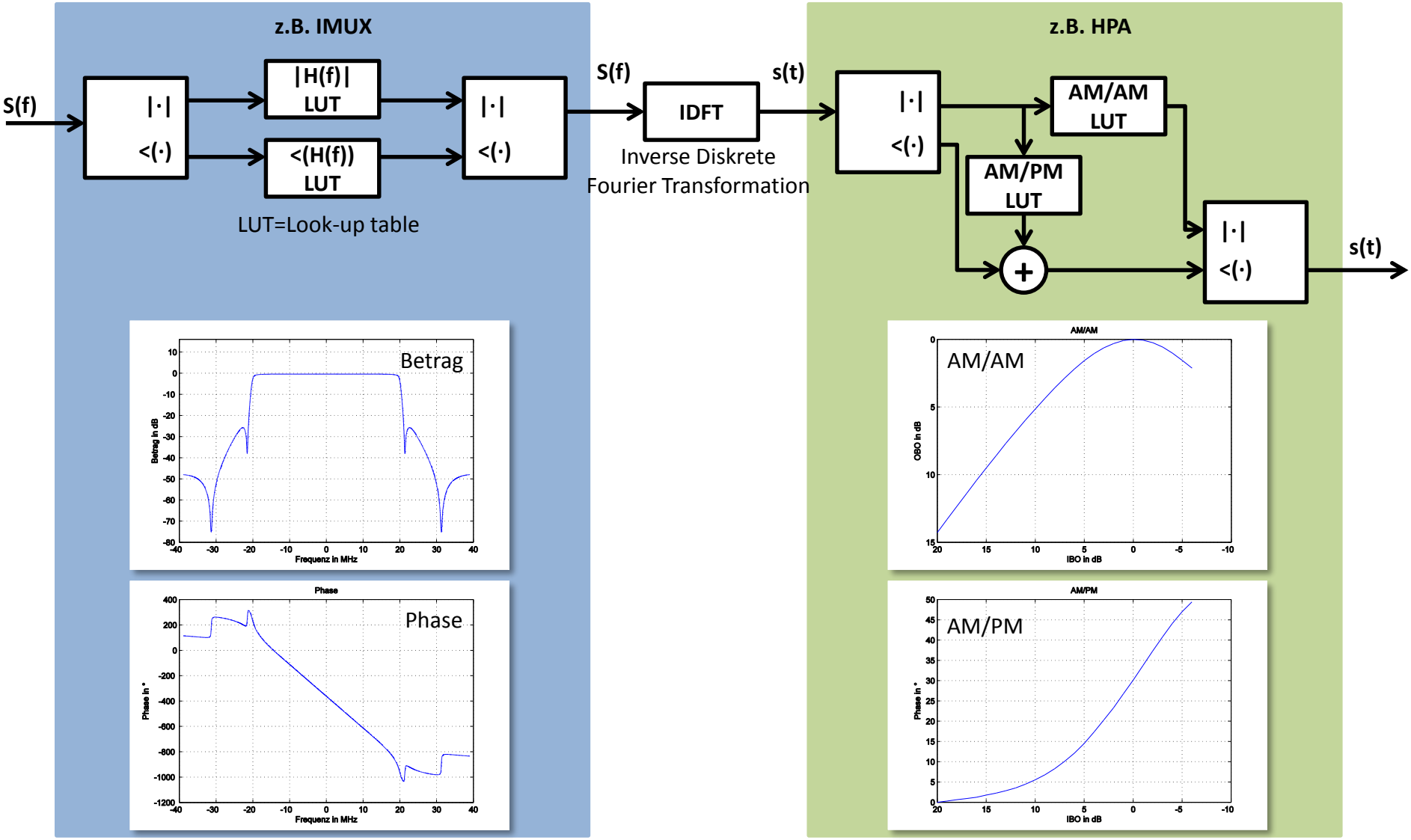

Conclusions, Types of Satellites

Payload type	Input	Output	Remarks
Repeater (Ka, Ku bands)	UL = n*RF	DL = n*RF	- Main application: TV broadcasting - Every payload is individual (switching matrix, DOCON frequencies, avoid harmonics in RX bands) - Linearization of amplifiers (MPM) to master flexible FDM - Strong requirements on IMUX/OMUX - Future trends: flexibility (TX power, variable center frequency and bandwidth for IMUX/OMUX, variable DOCON freqs) - OBP (regeneration of data) tbd.
Relay (EDRS) (Ka band)	Data stream via OISL	n*RF (via LCT tbd)	- Main application: Serving EO (and UAV) - Hybrid payload (Tesat leading position) - Future trends: Efficient ACM (Adaptive Coding & Modulation), Usage of Memory, Forward Services, OISL between GEOs, Routing
Earth Observation (EO) (X, Ka bands)	Onboard generated data	1...n*RF	- Numerous applications (monitoring, environmental, SAR, military) - Operation at saturation (On/off keying, spectral regrowth, Nyquist filter on ground) for QPSK - Operation with some OBO for APSK - Future trends: high data rates (>1 Gbps), up to 64 APSK, SCCC

Tesat Kennzahlen

- 1250 Mitarbeiter, Umsatz ~227 M€ in 2011, selbstständige Tochter der EADS Astrium GmbH
- Kapazität von 1500 Geräten und 75 Programmen pro Jahr
- Internationale Kundenbasis in Industrie, Wissenschaft & Militär

⇨ **Weiterer Aufbau von Mitarbeitern in 2013**

©Tesat-Spacecom GmbH & Co.KG 2010